ASME B16.34-2004
(Revision of ASME B16.34-1996)

Valves—Flanged, Threaded, and Welding End

AN AMERICAN NATIONAL STANDARD

The American Society of Mechanical Engineers

--`,,```,,,,````-`-`,,`,,`,`,,`---

Copyright ASME International
Provided by IHS under license with ASME
esale No reproduction or networking permitted without license from IHS

ASME B16.34-2004
(Revision of ASME B16.34-1996)

Valves — Flanged, Threaded, and Welding End

AN AMERICAN NATIONAL STANDARD

The American Society of Mechanical Engineers
Three Park Avenue • New York, NY 10016

Date of Issuance: September 2, 2005

The next edition of this Standard is scheduled for publication in 2007. There will be no addenda issued to this edition.

ASME issues written replies to inquiries concerning interpretations of technical aspects of this Standard. Interpretations are published on the ASME Web site under the Committee Pages at http://www.asme.org/codes/ as they are issued.

ASME is the registered trademark of The American Society of Mechanical Engineers.

This code or standard was developed under procedures accredited as meeting the criteria for American National Standards. The Standards Committee that approved the code or standard was balanced to assure that individuals from competent and concerned interests have had an opportunity to participate. The proposed code or standard was made available for public review and comment that provides an opportunity for additional public input from industry, academia, regulatory agencies, and the public-at-large.

ASME does not "approve," "rate," or "endorse" any item, construction, proprietary device, or activity.

ASME does not take any position with respect to the validity of any patent rights asserted in connection with any items mentioned in this document, and does not undertake to insure anyone utilizing a standard against liability for infringement of any applicable letters patent, nor assume any such liability. Users of a code or standard are expressly advised that determination of the validity of any such patent rights, and the risk of infringement of such rights, is entirely their own responsibility.

Participation by federal agency representative(s) or person(s) affiliated with industry is not to be interpreted as government or industry endorsement of this code or standard.

ASME accepts responsibility for only those interpretations of this document issued in accordance with the established ASME procedures and policies, which precludes the issuance of interpretations by individuals.

No part of this document may be reproduced in any form,
in an electronic retrieval system or otherwise,
without the prior written permission of the publisher.

The American Society of Mechanical Engineers
Three Park Avenue, New York, NY 10016-5990

Copyright © 2005 by
THE AMERICAN SOCIETY OF MECHANICAL ENGINEERS
All rights reserved
Printed in U.S.A.

CONTENTS

Foreword v
Committee Roster vii
Correspondence With the B16 Committee viii
Introduction ix

1 Scope 1

2 Pressure-Temperature Ratings 2

3 Nominal Pipe Size 4

4 Marking 4

5 Materials 5

6 Dimensions 6

7 Pressure Testing 10

8 Requirements for Special Class Valves 11

Figures

1 Method of Designating Location of Auxiliary Connections When Specified 13
2 Thread Length for Auxiliary Connections 14
3 Socket Welding for Auxiliary Connections 14
4 Butt Welding for Auxiliary Connections 14
5 Bosses for Auxiliary Connections 15
6 Gate Body (Pressure Seal Bonnet) 15
7 *Y* Pattern Globe Body (Pressure Seal Bonnet) 16
8 Angle Body (Pressure Seal Bonnet) Bonnet Same as *Y* Pattern Globe 16
9 Elbow Down (Pressure Seal Bonnet) 17
10 Gate Body (Flanged Bonnet) 17
11 Globe Body (Flanged Bonnet) 18
12 Butterfly Body 18
13 Plug Body 19
14 Conduit Gate Body (Pressure Seal Bonnet) 19
15 Dished Cover 20
16 Flat Cover 20
17 Butterfly Valve Body 21

Tables

1 Material Specification List: Applicable ASTM Specification 22
2 Pressure-Temperature Ratings 26
3 Valve Body Minimum Wall Thickness t_m, mm (in.) 91
4 Minimum Wall Thickness for Socket Welding and Threaded Ends 97

Mandatory Appendices

I Radiography Examination: Procedure and Acceptance Standards 99
II Magnetic Particle Examination: Procedure and Acceptance Standards 101
III Liquid Penetrant Examination: Procedure and Acceptance Standards 102
IV Ultrasonic Examination: Procedure and Acceptance Standards 103
V Requirements for Limited Class Valves 104
VI Basis Equations for Minimum Wall Thickness 107
VII Pressure-Temperature Ratings: U.S. Customary Units 109
VIII Reference Standards and Specifications 172

Nonmandatory Appendices

A Relationship Between Nominal Pipe Size and Inside Diameter 174
B Method Used for Establishing Pressure-Temperature Ratings 176
C Quality System Program 183

FOREWORD

In December 1969, American National Standards Committee B16 changed its name from Standardization of Pipe Flanges and Fittings to Standardization of Valves, Fittings, and Gaskets, reflecting American National Standards Institute approval of a broadened scope for the B16 Committee. At the same meeting, the committee approved a plan for the organization of a subcommittee to develop a new standard for steel valves with other than flanged ends. Subsequently, B16 Subcommittee 15 was appointed and held its first meeting in December 1970.

Historically, in the development of standards and pressure-temperature ratings for steel valves, the various rating classes for flanges provided an obviously logical basis for valve ratings. Steel valves with flanges of standard dimensions, many also offered in buttwelding-end versions, were given the same pressure-temperature ratings as the flanges. In 1949, a new edition of the standard, then designated B16e 1949, was published, in which a table covering wall thickness requirements for weld end valves had been added. In 1964, the Manufacturer's Standardization Society of the Valve and Fittings Industry developed and published Standard Practice SP 66, covering pressure-temperature ratings of steel buttwelding-end valves. SP 66 introduced a new method for establishing ratings by making ratings a function of the mechanical strength properties of the body material at all temperatures. Following the publication of SP 66, B16 activated Subcommittee 4 for the purpose of studying the general subject of pressure-temperature ratings and developing rational criteria for such ratings.

In the B16 charge to Subcommittee 15, it was established that the new standard would replace SP 66 and also remove the reference to buttwelding-end valves from B16.5. Flanged-end valves would continue to be covered in B16.5 but on a fully specified basis, rather than as an add-on.

As the work of the subcommittee got underway, concurrent action was initiated in Subcommittee 3 for revision of B16.5. Subsequent operations of Subcommittees 3 and 15 were closely coordinated to provide assurance that the new standard and the revised B16.5 would be compatible.

A key and basic issue of mutual concern in this coordination was the matter of pressure-temperature ratings. It was necessary to incorporate the SP 66-type ratings in the new standard, but at the same time also to provide ratings equivalent to those in B16.5 covering the buttwelding equivalents of flanged-end valves. Subcommittee 4 had made definitive recommendations for revisions in the flange ratings and it was obviously desirable to rationalize the two types of ratings as they would appear side-by-side in the new standard.

The results of these efforts appear herein in the form of pressure-temperature ratings tables. The method of computing the ratings is detailed in Nonmandatory Appendix B. The ratings differ from the pre-1968 B16.5 ratings because they are now calculated as a function of the mechanical properties of the pressure boundary materials, in contrast to the empirical basis used previously. A change in the SP 66-type rating (herein designated Special Class) discontinues the application of a plasticity factor at elevated temperatures which, in the opinion of the committee, could not be justified in dimension-sensitive valves.

Other innovations include the coverage of forged or fabricated body valves and an increase in detailed coverage by pressure-temperature ratings from 17 materials in B16.5 to 24 material groups in the new standard and in the revised B16.5. Dimensional requirements have been refined and augmented to give the designer more latitude and the user more assurance of adequacy. A number of the innovations have had trial use and at least some degree of acceptance, as they have been taken from the section on valve requirements developed and published by the ASME Boiler and Pressure Vessel Code to cover valves used in nuclear power plants. A section on valve testing eliminates uncertainties on such points as seat test requirements and stem seal testing.

Approval for the 1973 edition of the Standard by the American National Standards Institute was granted in October 1973.

In December 1973, a reorganization of the subcommittee structure for B16 was approved. Subcommittee 15 was redesignated as Subcommittee N and was assigned responsibility for all steel valves. Work began to include coverage for flanged-end valves in ANSI B16.34. The 1977

edition contained flanged-end valve requirements formerly in ANSI B16.5. The rating procedures of B16.5 were adopted and made applicable to Standard Class buttwelding-end valves. The method of deriving ratings was revised. Major changes were made in the method for determining ratings for austenitic stainless steel valves and ratings for Class 150 valves for all materials. The pressure-temperature tables and materials groups were rearranged and revised using data from the reference Sections of the ASME Boiler and Pressure Vessel Code through the Summer 1975 Addenda. A number of clarifying and editorial revisions were also made in order to improve the text. It was also resolved that frequent minor changes in pressure-temperature ratings because of revisions to the reference material strength property tables should be avoided and that, as a general guide, such changes should not be considered unless resulting ratings would be changed by an amount in excess of 10%.

Approval for the 1977 edition of the Standard by the American National Standards Institute was granted on June 16, 1977.

During 1979, work began on the 1981 edition. Materials coverage was expanded. Nickel alloys and other alloys were added. Bolting rules were revised to accommodate special alloy bolting for the new materials. Revisions were included to clarify requirements for rotary motion valves, e.g., ball valves and butterfly valves. Wafer-type valves were specifically identified. Other clarifying and editorial revisions were made in order to improve the text.

Following approvals by the Standards Committee and Secretariat, approval for the 1981 edition was granted by the American National Standards Institute on August 14, 1981.

During 1985, revisions were proposed that added requirements for socket welding-end and threaded-end valves. The inclusion of requirements for these valves increased the scope of the Standard. Also, the listings for nickel alloy and other alloy valves materials were expanded. Rules for threaded body joints were added, and wafer-type valve body rules improved.

Following approvals by the Standards Committee and ASME, approval for the 1988 edition was granted by the American National Standards Institute on February 24, 1988.

During 1993 and carrying over into 1994, revisions offered included multiple material marking and an improved interpolation procedure. New materials were added and the pressure-temperature rating tables were recalculated in accordance with Nonmandatory Appendix B using the latest data available from the reference ASME Boiler and Pressure Vessel Code sources. An appendix was added covering nonmandatory requirements for a quality system program.

Following the approvals the Standards Committee and ASME, approval for the new edition was granted by the American National Standards Institute on October 3, 1996.

Work was started during 1999 to revise the standard to include metric units as the primary reference units while maintaining U.S. customary units in either parenthetical or separate forms. The goal is to delete the U.S. customary units when the standard is next issued. All pressure-temperature ratings have been recalculated using data from the latest edition of the ASME Boiler and Pressure Vessel Code, Section II, Part D. As a result, some materials have been shifted to other material groups and some changes have been made to some valve ratings within material groups. Because of diminished interest for flanged end valves conforming to ASME Class 400, they are not specifically listed in this revision. Flanges for Class 400 will continue to be listed in B16 flange standards. Provision has been made to allow Class 400 valves to be furnished as intermediate rated valves. Numerous requirement clarifications and editorial revisions have also been made.

Following the approvals of the Standards Committee and ASME, approval for the new edition was granted by the American National Standards Institute on February 20, 2004.

All requests for interpretation or suggestions for revisions should be sent to the Secretary, B16 Committee, The American Society of Mechanical Engineers, Three Park Avenue, New York, NY 10016-5990.

ASME B16 COMMITTEE
Standardization of Valves, Flanges, Fittings, and Gaskets

(The following is the roster of the Committee at the time of approval of this Standard.)

OFFICERS

H. R. Sonderegger, *Chair*
M. L. Nayyar, *Vice Chair*
P. A. Reddington, *Secretary*

COMMITTEE PERSONNEL

W. B. Bedesem, ExxonMobil Research and Engineering Co.
M. A. Clark, Nibco, Inc.
A. Cohen, Arthur Cohen & Associates
C. E. Floren, Muller Co.
D. R. Frikken, Consultant
A. Hamilton, ABS Americas
M. L. Henderson, Forgital USA
G. A. Jolly, Vogt Valve/Flowserve
M. Katcher, Haynes International
W. G. Knecht, Consultant
R. Koester, The William Powell Co.
R. D. Manning, U.S. Coast Guard
W. N. McLean, Newco Valves
T. A. McMahon, Fisher Controls International, Inc.
M. L. Nayyar, Bechtel Power Corp.
J. D. Page, U. S. Regulatory Commission
P. A. Reddington, The American Society of Mechanical Engineers
R. A. Schmidt, Trinity-Ladish
H. R. Sonderegger, Anvil International, Inc.
W. M. Stephan, Flexitalic, Inc.
T. F. Stroud, Ductile Iron Pipe Research Association
R. E. White, Richard E. White & Associates PC
D. A. Williams, Southern Company Services

B16 SUBCOMMITTEE N PERSONNEL

W. N. McLean, *Chair,* Newco Valves
R. Koester, *Vice Chair,* The William Powell Co.
A. J. Roby, *Secretary,* The American Society of Mechanical Engineers
R. W. Barnes, Anric Enterprises, Inc.
W. B. Bedesem, Exxon/Mobil Research and Engineering Co.
T. R. Brooks, Northrup Grumman Corp.
R. Chakravarti, Foster Wheeler USA Corp.
D. R. Frikken, Consultant
A. Hamilton, ABS Americas
G. A. Jolly, Vogt Valve/Flowserve
M. Katcher, Haynes International
W. G. Knecht, Consultant
R. D. Manning, U. S. Coast Guard
T. A. McMahon, Fisher Controls International, Inc.
M. L. Nayyar, Bechtel Power Corp.
J. D. Page, U. S. Regulatory Commission
G. J. Paptzun, Consultant
D. W. Rahoi, CCM 2000
R. W. Rapp, Jr., Consultant
H. R. Sonderegger, Anvil International, Inc.
J. C. Thompson, Consultant
J. P. Tucker, Flowserve
J. T. White, Puget Sound Naval Shipyard
J. B. Wright, Metso Automation

CORRESPONDENCE WITH THE B16 COMMITTEE

General. ASME Standards are developed and maintained with the intent to represent the consensus of concerned interests. As such, users of this Standard may interact with the Committee by requesting interpretations, proposing revisions, and attending Committee meetings. Correspondence should be addressed to:

Secretary, B16 Standards Committee
The American Society of Mechanical Engineers
Three Park Avenue
New York, NY 10016-5990

Proposing Revisions. Revisions are made periodically to the Standard to incorporate changes that appear necessary or desirable, as demonstrated by the experience gained from the application of the Standard. Approved revisions will be published periodically.

The Committee welcomes proposals for revisions to this Standard. Such proposals should be as specific as possible, citing the paragraph number(s), the proposed wording, and a detailed description of the reasons for the proposal, including any pertinent documentation.

Interpretations. Upon request, the B16 Committee will render an interpretation of any requirement of the Standard. Interpretations can only be rendered in response to a written request sent to the Secretary of the B16 Standards Committee.

The request for interpretation should be clear and unambiguous. It is further recommended that the inquirer submit his/her request in the following format:

Subject:	Cite the applicable paragraph number(s) and the topic of the inquiry.
Edition:	Cite the applicable edition of the Standard for which the interpretation is being requested.
Question:	Phrase the question as a request for an interpretation of a specific requirement suitable for general understanding and use, not as a request for an approval of a proprietary design or situation. The inquirer may also include any plans or drawings, which are necessary to explain the question; however, they should not contain proprietary names or information.

Requests that are not in this format will be rewritten in this format by the Committee prior to being answered, which may inadvertently change the intent of the original request.

ASME procedures provide for reconsideration of any interpretation when or if additional information that might affect an interpretation is available. Further, persons aggrieved by an interpretation may appeal to the cognizant ASME Committee or Subcommittee. ASME does not "approve," "certify," "rate," or "endorse" any item, construction, proprietary device, or activity.

Attending Committee Meetings. The B16 Standards Committee regularly holds meetings, which are open to the public. Persons wishing to attend any meeting should contact the Secretary of the B16 Standards Committee.

INTRODUCTION

An American National Standard is intended as a basis for common practice by the manufacturer, the user, and the general public. The existence of an American National Standard does not in itself preclude the manufacture, sale, or use of products not conforming to the standard. Mandatory conformance is established, for example, by reference to the standard in a code, specification, sales contract, or public law.

It should be noted, specifically regarding this Standard, that certain requirements reflecting the general application of valves in a wide variety of services may not be considered to be appropriate for some valves whose application is known and which may incorporate certain features found by successful experience to be satisfactory. A specific case in point is that involving valves developed and used in gas and petroleum product pipelines. Conformance of such valves to the existing API 6D may by itself be sufficient to satisfy requirements of federal rules and regulations established by the Department of Transportation, Office of Pipeline Safety Operations. Another specific case is that involving valves used in instrument systems under an applicable piping code. Conformance of such valves to the requirements of an existing piping code may by itself be sufficient to satisfy jurisdictional rules and regulations.

This edition of ASME B16.34 states values in both metric SI and U.S. customary units of measurement. These systems of units are to be regarded separately. The values stated in each system are not exact equivalents; therefore each system shall be used independently of the other. Combining values from the two systems constitutes nonconformance with this Standard.

VALVES — FLANGED, THREADED, AND WELDING END

1 SCOPE

1.1 General

This Standard applies to new construction and covers pressure-temperature ratings, dimensions, tolerances, materials, nondestructive examination requirements, testing, and marking for cast, forged, and fabricated flanged, threaded, and welding end and wafer or flangeless valves of steel, nickel-base alloys, and other alloys shown in Table 1. Wafer or flangeless valves, bolted or through-bolt types, that are installed between flanges or against a flange are treated as flanged-end valves. Alternative rules for NPS 2½ and smaller valves are given in Mandatory Appendix V.

1.2 Applicability

1.2.1 Standards and Specifications. Standards and specifications adopted by reference in this Standard and the names and addresses of the sponsoring organizations are shown in Mandatory Appendix VIII. It is not considered practical to refer to a specific edition of each of the standards and specifications in the individual clause references. Instead, the specific edition references are included in Mandatory Appendix VIII. A product made in conformance with a prior edition of reference standards and in all other respects conforming to this Standard shall be considered to be in conformance even though the edition reference may have been changed in a subsequent revision of this Standard.

1.2.2 Time of Purchase, Manufacture, or Installation. The pressure-temperature ratings included in this Standard are applicable, upon publication, to all valves covered within its scope that meet its requirements. For unused valves, valves which have been maintained in inventory, the manufacturer may certify conformance to this edition provided that it can be demonstrated that all requirements of this edition have been met. However, where such components were installed under the pressure-temperature ratings of an earlier edition of ASME B16.34, those ratings shall apply except as may be governed by an applicable Code or regulation.

1.2.3 User Accountability. This Standard cites duties and responsibilities that are to be assumed by the valve user in the areas of, for example, application, installation, system hydrostatic testing, operation, and material selection.

1.2.4 Quality Systems. Requirements relating to a valve manufacturer's Quality System Program are described in Nonmandatory Appendix C.

1.2.5 Relevant Units. This Standard states valves in both metric and U.S. customary units. These systems of units are to be regarded separately. The U.S. customary units are shown in parentheses or are listed in separate tables. The values stated in each system are not exact equivalents; therefore it is required that each system of units be used independently of the other. Combining values from the two systems constitutes nonconformance with the Standard.

1.3 Service Conditions

Criteria for selection of valve types and materials suitable for particular fluid service are not within the scope of this Standard.

1.4 Convention

For the purpose of determining conformance with this Standard, the convention for fixing significant digits where limits, maximum and minimum values, are specified shall be "rounding off" as defined in ASTM Practice E 29. This requires that an observed or calculated value shall be rounded off to the nearest unit in the last right-hand digit used for expressing the limit. Decimal values and tolerance do not imply a particular method of measurement.

1.5 Denotation

1.5.1 Pressure Rating Designation. Class, followed by a dimensionless number, is the designation for pressure-temperature ratings. Standardized designations are as follows:

Class	150	300	600	900	1500	2500	4500

Class 400, an infrequently used flanged-end valve designation, is regarded as an intermediate class designation.

1.5.2 Size. NPS, followed by a dimensionless number, is the designation for nominal valve size. NPS is related to the reference *nominal diameter*, DN, used in international standards. The relationship is, typically, as follows:

NPS	¼	⅜	½	¾	1	1¼	1½	2	2½	3	4
DN	8	10	15	20	25	32	40	50	65	80	100

For NPS ≥ 4, the related DN is: DN = 25 multiplied by the NPS number.

1.6 References

Codes, standards, and specifications, containing provisions to the extent referenced herein, constitute requirements of this Standard. These reference documents are listed in Mandatory Appendix VIII.

2 PRESSURE-TEMPERATURE RATINGS

2.1 General

Pressure-temperature ratings are designated by class numbers. Each class number is further identified as Standard, Special, or Limited Class.

2.1.1 Rating Designations. Rating designations are tabulated for Standard and Special Class 150, 300, 400, 600, 900, 1500, 2500, and 4500 in Table 2 in metric units and in Mandatory Appendix VII in customary units. Ratings for Limited Class are determined by the method in Mandatory Appendix V.[1]

(a) Flanged-end valves shall be rated only as Standard Class.

(b) Class 4500 applies only to welding-end valves.

(c) A class designation greater than Class 2500 or a rating temperature greater than 538°C (1000°F) applied to threaded-end valves is beyond the scope of this Standard.

(d) Threaded and socket welding-end valves larger than NPS 2½ are beyond the scope of this Standard.

(e) Except as provided in para. 2.5, the tabulated ratings are the maximum allowable working pressures, expressed as gage pressure, at the temperatures shown.

(f) Ratings intermediate to tabulated values are determined by linear interpolation between temperatures within a class number or between class numbers, except that for flanged-end valves interpolation between tabulated classes is not permitted. A further exception is that Class 400 valves having ASME B16.5 flanged ends shall use the intermediate rating method of para. 2.1.5.

(g) In all cases, valves shall be constructed so that the body, bonnet or cover, body bolting, and bonnet or cover bolting meet the 38°C (100°F) pressure rating requirements for the designated pressure class or pressure-temperature rating. However, pressure-temperature ratings for the valve may be otherwise limited by construction details or material design considerations, in which case the requirements of paras. 4.3.3 and 7.2.3 shall be met.

2.1.2 Standard Class Valves. Valves conforming to the requirements of this Standard, except for those meeting the additional requirements of Section 8 for Special Class valves or of Mandatory Appendix V for Limited Class valves, shall be designated Standard Class valves. Ratings shall not exceed the values that are listed in Table 2 with an identifying suffix "A."

2.1.3 Special Class Valves. Threaded- or welding-end valves that conform to all the requirements of para. 2.1.2, and in addition have successfully passed the examinations required by Section 8, may be designated Special Class valves. Pressure-temperature ratings shall not exceed the values that are listed in Table 2 with an identifying table number suffix "B." Special Class ratings shall not be used for flanged-end valves.

2.1.4 Limited Class Valves. Welding- or threaded-end valves in sizes NPS 2½ and smaller that conform to the requirements of Mandatory Appendix V may be designated Limited Class valves. Pressure-temperature ratings shall not exceed the values calculated in accordance with Mandatory Appendix V. Limited Class ratings shall not be used for flanged-end valves.

2.1.5 Intermediate Rated Valves. A Standard Class or Special Class welding- or threaded-end valve or a Standard Class 400 flanged-end valve may be assigned an intermediate pressure-temperature rating or Class in accordance with para. 6.1.4, provided all other applicable requirements of this Standard are met. Correspondingly, an intermediate pressure rating or Class for Limited Class valves having welding ends or threaded ends may be assigned pressure-temperature ratings as determined by the method described in Mandatory Appendix V in conjunction with the interpolation procedure described in para. 6.1.4.

2.1.6 Valves Fabricated by Welding. A valve made wholly or partly from segments of castings, forging, bars, plates, or tubular product welded together will merit the applicable pressure-temperature rating only if

(a) it conforms to all applicable requirements of this Standard

(b) weld fabrication and heat treatment of welds are in accordance with the ASME Boiler and Pressure Vessel Code, Section VIII, Division 1[2]

(c) nondestructive examination of welds is in accordance with the ASME Boiler and Pressure Vessel Code, Section VIII, Division 1, as required to warrant a joint efficiency, E, not less than

(1) 0.80 for flanged-end and Standard Class welding-end valves larger than size NPS 6

[1] Throughout this Standard the metric unit used for pressure is *bar* where 1 bar is equivalent to 0.1 MPa. Use of the term bar for pressure is an aid in distinguishing between values for pressure and stress where stress values are given in MPa units. This also recognizes the common usage of the term bar for pressure in International Standards for piping components such as valves and fittings.

[2] Standard Welding Procedure Specifications published by the American Welding Society and listed in Appendix E of the ASME Boiler and Pressure Code, Section IX, are permitted within the limitations established by Article V of the ASME Boiler and Pressure Vessel Code, Section IX.

(2) 1.00 for Special Class welding-end or threaded-end valves in all sizes (see para. 8.3.3)

These requirements are not applicable to seal welds or attachment welds such as for backseat bushings, seat rings, lifting lugs, and auxiliary connections.

2.2 Rating Temperature

The temperature shown for a corresponding pressure rating is the temperature of the pressure-containing shell of the component. In general, this temperature is the same as that of the contained fluid. Use of a pressure rating corresponding to a temperature other than that of the contained fluid is the responsibility of the user, subject to the requirements of applicable codes and regulations.

2.3 Temperature Effects

2.3.1 High Temperature. Application at temperatures in the creep range will result in decreasing bolt loads as relaxation of flanges, bolts, and gaskets takes place. Flanged joints subject to thermal gradients may likewise be subject to decreasing bolt loads. Decreased bolt loads diminish the capacity of the flanged joint to sustain loads effectively without leakage. At elevated temperatures, flanged joints, and in particular Class 150, may develop leakage problems unless care is taken to avoid imposing severe external loads or severe thermal gradients.

2.3.2 Low Temperature. The pressure rating for service at any temperature below −29°C (−20°F) shall be no greater than the rating shown in Table 2 for −29°C (−20°F). Some of the materials listed in Table 1, notably some carbon steels, may undergo a decrease in ductility when used at low temperatures to such an extent as to be unable to safely resist shock loading, sudden change of stress, or high stress concentration. Some codes or regulations may require impact testing for applications even where temperatures are higher than −29°C (−20°F). When such requirements apply, it is the responsibility of the user to ensure these requirements are communicated to the manufacturer prior to the time of purchase.

2.3.3 Fluid Thermal Expansion. Under certain conditions, some double-seated valve designs are capable of sealing simultaneously against pressure differential from the center cavity to the adjacent pipe in both directions. A circumstance in which the center cavity is filled or partially filled with liquid and subjected to an increase in temperature can result in an excessive buildup of pressure in the center cavity that may lead to pressure boundary failure. An example is a piping system in which liquid from the condensing, cleaning, or testing fluids accumulates in the center cavity of a closed valve. Such accumulation may result from leakage past the upstream seat of the valve. If, during subsequent startup, the valve is not relieved of the liquid by partial opening of the valve, or by some other method, the retained liquid may be heated during warm-up of the system. Where such a condition is possible, it is the responsibility of the user to provide, or require to be provided, means in design, installation, or operation procedure to assure that the pressure in the valve will not exceed that allowed by this Standard for the attained temperature.

2.4 Guidance for the Use of Flanged Valve Ratings

Application of flanged-end valves at either high or low temperatures or in a service subject to rapid fluid temperature variations entails some risk of flanged joint leakage. Guidance in this regard is provided in ASME B16.5 and more extensively in ASME PCC-1. Precautions regarding the bolting of raised face flanges to cast iron flanges are given in ASME B16.5.

2.5 Variances

Except as provided in paras. 2.5.1, 2.5.2, and 2.5.3, the pressure-temperature ratings are the maximum allowable working pressure for the corresponding temperature.

2.5.1 Safety Valves, Relief Valves, or Rupture Disk Operation. Under conditions of safety valve, relief valve, or rupture disk operation, pressure may exceed the rated pressure for a valve furnished under this Standard by no more than 10% of that defined by the pressure-temperature rating. Such conditions are necessarily of limited duration. Damage that may result from pressure excursions in excess of the aforementioned is solely the responsibility of the user.

2.5.2 Other Variances. Damage that may result from subjecting a valve to other operating variances (transients) in excess of its pressure rating is solely the responsibility of the user.

2.5.3 System Hydrostatic Tests. If valves conforming to this Standard are subjected to hydrostatic pressure testing of piping systems with the valve in the closed position at pressures greater than the 38°C (100°F) rating, or, if applicable, at pressure greater than the closed pressure differential shown on the valve identification plate (see para. 4.3.3), damage resulting from such testing is solely the responsibility of the user. In the open position, valves installed in a piping system may be subjected to system pressure tests at pressures that do not exceed the hydrostatic shell test of para. 7.1, provided the user has determined that there are no functional limitations, for example, restrictions on actuating devices or special materials of construction.

2.6 Multiple Material Grades

Material for valve bodies, bonnets, or cover plates may meet the requirements of more than one specification or the requirements of more than one grade of a specification listed in Table 1. In either case, the pressure-temperature ratings for any of these specifications or grades

may be used provided the requirements of para. 5.1 are satisfied; the material is marked in accordance with para. 4.2.8; and account is taken of para. 5.2.2.

2.7 Local Operating Conditions

When a valve (or series of valves) is installed in a piping system that operates with different pressures (or temperatures) on either side of the closed valve, it is the responsibility of the user to ensure that the installed valve is suitable for the highest of the rating requirements considering combinations of pressure and temperature.

3 NOMINAL PIPE SIZE

As applied in this Standard, the use of the phrase "nominal pipe size" or the designation NPS followed by a number is for the purpose of pipe or valve-end connection size identification. The number is not necessarily the same as the valve inside diameter. The relationship between inside diameter (see para. 6.1.2) and nominal pipe size is shown in Nonmandatory Appendix A. The reference dimension, *d*, in Table 3 is the valve inside diameter as defined in para. 6.1.2.

4 MARKING

4.1 General

Except as modified herein, valves shall be marked as required in MSS SP-25 and shall include the following requirements.

4.2 Identification Markings

4.2.1 Name. The manufacturer's name or trademark shall be shown.

4.2.2 Materials. Materials used for valve bodies, bonnets, and cover plates shall be identified in the following way.

(a) Cast valves shall be marked with the heat number or heat identification and symbols (letters and numbers) as given in the ASTM specification to designate the material grade.

(b) Forged or fabricated valves shall be marked with the ASTM specification number and grade identification symbol (letters and numbers). If the ASTM grade identification symbols are unique to the material product form or grade being used, that is, the symbols are not used with any other ASTM material product form or grade, the ASTM number may be omitted. When more than one material or grade of materials is used for a fabricated valve, each shall be identified. Also, when one material grade is used for a valve assembly, a single material marking on the body is all that is required.

(c) The ASME Boiler and Pressure Vessel Code, Section II specification number may be substituted for a corresponding ASTM specification number in 4.2.2 (a) and (b) provided that the requirements of the ASME specification are identical or more stringent than the ASTM specification for the Grade, Class, or Type of material.

(d) A manufacturer may supplement these mandatory material identifications with his trade designation for the material grade, but confusion with the marking required herein shall be avoided.

4.2.3 Rating. The valve body shall be marked with the number that corresponds to the pressure rating class designation except that Special Class, Limited Class, Intermediate Rated — Standard Class and Intermediate Rated — Special Class valves may instead be marked with a specific rated pressure and temperature.

4.2.4 Temperature. Temperature markings are not required except as indicated in paras. 4.2.3 and 4.3.3.

4.2.5 Size. The NPS designation number shall be shown.

4.2.6. Omission of Markings. On valves whose size or shape limits the body markings, they shall be omitted in the following order:

(a) size
(b) rating
(c) material
(d) manufacturer's name or trademark

4.2.7 Ring-Joint Flange. Valves having ring-joint end flanges shall have the edge (periphery) of each ring-joint end flange marked with the letter "R" and the corresponding ring-groove number. Groove numbers are listed in ASME B16.5.

4.2.8 Multiple Material Marking. Material for valve bodies, bonnets, and cover plates that meet the requirements for more than one specification or grade of a specification listed in Table 1 may, at the manufacturer's option, be marked with more than one of the applicable specification or grade symbols. These identification markings shall be placed to avoid confusion in identification. The acceptablility of multiple marking shall be in accordance with the guidelines set out in ASME Boiler and Pressure Vessel Code, Section II, Part D, Appendix 7.

4.3 Identification Plate

4.3.1 Attachment. An identification plate that includes the manufacturer's name shall be secured to each valve.

4.3.2 Pressure Markings. The identification plate shall be marked with the applicable valve pressure rating at 38°C (100°F) and the pressure rating class designation number.

4.3.3 Special Markings. Valves whose construction limits use to less than the pressure-temperature values

for the marked pressure rating class designation shall indicate these limitations on the identification plate. Examples in this category are valves using elastomeric gaskets or seating elements, valves with closure elements designed for closure pressure differentials lower than the basic rated pressure of the valve body, or valves using carbon steel bonnet bolts such as ASTM A 307, Grade B.

4.4 Conformity

4.4.1 Designation. Valves conforming to Standard Class requirements shall include the designation "B16.34" on the identification plate. For Special Class valves, the identification plate shall include the designation "B16.34 SPL." For Limited Class valves, the identification plate shall include the designation "B16.34 LTD." The use of the prefix "ASME" to these designations is optional.

4.4.2 Compliance. The "B16.34" identification marking of para. 4.4.1 designates that the valve was manufactured in conformance with ASME B16.34.

5 MATERIALS

5.1 General

The body, bonnet or cover, body joint bolting, and body-bonnet or cover bolting, shall be constructed of materials as listed in the respective ASTM specifications referred to in Table 1. Identical materials in accordance with the ASME Boiler and Pressure Vessel Code, Section II may also be used for these parts.

5.1.1 Application. It is not required that identical material or material form be used for body and bonnet or cover parts. The rating applied, however, shall be based on the valve body. The bonnet or cover shall be designed and material selected so as to comply with the body pressure-temperature rating. Selection of stems, disks, and other parts, such as bonnet gaskets and bolting, subject to pressure and other loading, must be consistent with the applicable valve pressure-temperature rating.

5.1.2 Carbon Steel Bonnet or Cover Bolting. It is permissible to use carbon steel, for example, ASTM A 307, Grade B, for bonnet or cover bolting only for Class 300 and lower, provided the service temperature is limited to 200°C (400°F) and marking is in accordance with para. 4.3.3.

5.1.3 Investment Castings. When investment castings are used for bodies, bonnets, or cover plates of valves in sizes NPS 4 and smaller where the ratings do not exceed Class 600, the requirements of the ASTM specifications referred to in Table 1 shall be met, except that it is permissible to determine mechanical and chemical properties from a master heat and to use a 25 mm gage length × 6.25 mm diameter (1 in. × 0.25 in. diameter) tensile specimen in place of the standard 2 in. tensile specimen. A master heat is previously refined metal of a single furnace charge. Tensile specimens shall be cast in molds of the same refractory as the castings and shall be given the same heat treatment as the castings. When investment castings are used for sizes and pressure classes greater than those described in this paragraph, all the requirements of the applicable material specification listed in Table 1 shall be met.

5.1.4 Cast Surfaces. Cast surfaces of pressure boundary parts shall be in accordance with MSS SP-55 except that all Type 1 defects are unacceptable and defects in excess of Plates "a" and "b" for Type II through Type XII are unacceptable.

5.1.5 Mechanical Properties. Mechanical properties shall be obtained from test specimens that represent the final heat-treated condition of the material required by the material specification.

5.2 Material Selection

5.2.1 Service Conditions. Criteria for the selection of materials are not within the scope of this Standard. The possibility of material deterioration in service and the need for periodic inspections is the responsibility of the user. Carbide phase conversion to graphite, oxidation of ferritic materials, decrease in ductility of carbon steels at low temperatures even in applications above -10°C (20°F), and susceptibility to intergranular corrosion of austenitic materials or grain boundary attack of nickel-base alloys are among those items requiring attention by the user. A discussion of precautionary considerations can be found in ASME B31.3, Appendix F; ASME Boiler and Pressure Vessel Code, Section II, Part D, Appendix 6, and ASME Boiler and Pressure Vessel Code, Section III, Division 1, Appendix W.

5.2.2 Responsibility. When service conditions dictate the implementation of special material requirements, e.g., using a Group 2 material above 538°C (1000°F), it is the user's responsibility to so specify to the manufacturer in order to ensure compliance with metallurgical requirements listed in the end notes to Table 1 and the notes in Table 2.

5.3 Electrical Continuity

Internal parts that are insulated from the valve body may build up a static electric charge. An example is a ball valve with seats and seals of nonconductive materials. When service conditions require electrical continuity to prevent static discharge, the user is responsible for specifying static grounding.

5.4 Flange Removal

When an end flange is removed from a flanged-end valve body casting to make a welding-end valve casting,

discontinuities may be observed that would not have been detrimental in the flanged body casting. The valve manufacturer that removes an end flange from a valve body casting during the course of manufacture has responsibility for the acceptability of the resultant welding-end valve casting. This responsibility includes pressure testing the resultant weld-end valve in accordance with Section 7.

6 DIMENSIONS

6.1 Body Dimensions

6.1.1 Wall Thickness. For inspection purposes, the wall thickness of valve bodies at the time of manufacture except as indicated in paras. 6.1.3 through 6.1.7 and 6.7, shall be no less than the minimum values t_m either as shown in Table 3 or calculated using the equation shown in Mandatory Appendix VI (which yield essentially the same result). Linear interpolation may be used for wall thickness values intermediate to those listed or calculated. See Nonmandatory Appendix B, para. B-5 for an explanation of the interpolation procedure. The minimum thickness requirement for the body wall is applicable only as measured from internal wetted surfaces. Minimum wall thickness determination shall not include liners, linings, or cartridges.

6.1.2 Inside Diameter. For the purpose of determining the wall thickness t_m, the inside diameter, d, is taken as the minimum diameter of the flow passage but not less than 90% of the basic inside diameter at the valve end. For socket welding- and threaded-end valves, the socket or thread diameters and associated counterbores or tapped bores need not be considered in establishing the value of d (see paras. 6.2.3 and 6.2.4). For the special case of valves used between high and low pressure sections of a system where an end connection for a thinner pipe wall (or lower class flange) on one end than on the other, the inside diameter, d, shall be based on the end connection with the heavier pipe wall (or higher class flange). Localized variations of inside diameter associated with transitions to weld preparations need not be considered. Note, however, limitations of proximity of body neck in para. 6.1.5. Where linings, liners, or cartridges are used to form the flow passage or portions of the flow passage, the inside diameter, d, shall be that at the liner-body interface. For inside diameters which lie between diameters for which minimum wall thickness is tabulated, t_m may be determined by linear interpolation.

6.1.3 Valve Body Necks. For inspection purposes, the wall thickness of valve body necks at the time of manufacture shall be no less than the minimum values determined by the following:

(a) Valve body necks, except for the special cases described in paras. 6.1.3(b), (c), and (d), shall maintain the minimum wall thickness as described in paras. 6.1.1 and 6.1.2 within a region of $1.1\sqrt{dt_m}$ measured from the outside of the body run along the neck direction. The diameter, d, is as defined in para. 6.1.2, and t_m is the minimum wall thickness as shown in Table 3. Minimum wall thickness requirements are applicable to and measured from internally wetted surfaces, e.g., up to the point where the body-bonnet seal is affected.

Beyond the aforementioned $1.1\sqrt{dt_m}$ region, straight circular sections of valve body necks with inside diameter d' shall be provided with local wall thickness at least equal to t' where t' is taken from the appropriate (tabulated or intermediate) rating Class in Table 3 using an appropriate diameter d''.

For 150 ≤ Class ≤ 2500:

$$d'' = \frac{2d'}{3}$$

For 2500 < Class ≤ 4500:

$$d'' = \frac{d'}{48}\left(27 + \frac{P_c}{500}\right)$$

where P_c is the pressure class designation as defined in Nonmandatory Appendix B, para. B-1.3.

(b) For the special case where $d' > 1.5d$, it is necessary that the wall thickness be equal to or greater than t' for the entire body neck length having diameter d', including the aforementioned $1.1\sqrt{dt_m}$ region.

(c) For the special case of valve body necks having a small diameter relative to the body run diameter, that is, $d/d' \geq 4$ (for example, a butterfly valve stem penetration), the minimum local wall thickness over a distance, L, where

$$L = t_m\left(1 + 1.1\sqrt{\frac{d}{t_m}}\right)$$

measured starting from the intersection of the body inside diameter and the axis of the body neck outside diameter, shall be equal to t' where t' is obtained from Table 3 using the appropriate body neck inside diameter d' and the appropriate pressure class. This special case is illustrated in Fig. 17. Beyond the aforementioned distance, L, valve body necks shall be provided with local minimum wall thickness based on d'', in accordance with para. 6.1.3(a).

(d) For the special case of a body neck in which holes are drilled or tapped in the body neck wall parallel with the body neck axis, it is required that the sum of the ligaments at the inner and outer sides be equal to or greater than t_m or t', as applicable. The inner ligament and the ligament at the bottom of the drill hole shall be

no less than $0.25t_m$ or $0.25t'$, as applicable. Furthermore, it is required that this thickness shall extend for a length along the body length, starting at the top of the neck, at least equal to the depth of the hole plus a distance equal to one-half of the hole or bolt diameter.

6.1.4 Valves With Intermediate Ratings. The intermediate pressure temperature rating class designation, $P_{ci,}$ and minimum wall thickness, t_m, for threaded- or welding-end valves with intermediate pressure ratings shall be determined in accordance with para. B-5.3 of Nonmandatory Appendix B. For Class 400 flanged-end valves the minimum wall thickness, t_m, and the intermediate pressure ratings shall be determined by interpolation in accordance with para. B-5.3 of Nonmandatory Appendix B.

6.1.5 Contours at Body Ends. Contours at valve body ends shall be in accordance with the following requirements.

(a) Buttwelding Ends. The weld preparation (see para. 6.2.1) shall not reduce the body wall thickness to less than the values required by para. 6.1.1 or 6.1.4 within a region closer to the outside surface of the body neck than t_m measured along the run direction. The transition to the weld preparation shall be gradual and the section must be essentially circular through the entire length of the transition. Sharp discontinuities or abrupt changes in sections that infringe into the transition shall be avoided, except that test collars or bands, either welded or integral, are allowed. In no case shall the thickness be less than $0.77t_m$ at a distance of $2t_m$ from the weld end.

(b) Socket Welding and Threaded Ends. The distance from the center line of generally cylindrical flow passages to the external surface of the body run shall be no less than 0.5 times the appropriate nominal pipe outside diameter listed in ASME B36.10M.

(c) Completed Ends. After the tests required by para. 7.1 have been completed, and at the manufacturer's discretion, semifinished buttwelding ends may be machined to final dimensions, flange gasket seating surfaces may be machined to a final surface finish, or threaded ends may be converted to socket welding ends, all without any additional pressure testing.

6.1.6 Local Areas. Local areas having less than minimum wall thickness are acceptable provided that all of the following limitations are satisfied.

(a) Measured thickness is no less than $0.75t_o$.

(b) The area of subminimum thickness can be enclosed by a circle whose diameter is no greater than $0.35\sqrt{d_o t_o}$). For valve body necks, use $d_o = d'$ and $t_o = t'$ (see para. 6.1.3). For all other local areas, use $d_o = d$ (see para 6.1.2) and $t_o = t_m$ (see para. 6.1.1 or 6.1.4, as appropriate).

(c) Enclosure circles are separated from each other by an edge-to-edge distance of no less than $1.75\sqrt{d_o t_o}$.

6.1.7 Additional Metal Thickness. Additional metal thickness needed, e.g., for assembly loads, actuating (closing and opening) loads, shapes other than circular, and stress concentrations, must be determined by individual manufacturers since these factors vary widely. In particular, inclined stem valves, intersections and openings in enlarged body cavities, and some types of fabricated body valves may require additional reinforcement to assure adequate strength and rigidity.

6.2 End Dimensions

6.2.1 Buttwelding Ends. Unless otherwise specified by the purchaser, the details of the welding-end preparation shall be in accordance with ASME B16.25 with

(a) the inside diameter (denoted as dimension *B* in ASME B16.25) having the following tolerance:

Size	Tolerance for "B" Dimension
NPS ≤ 10	± 1.0 mm (± 0.03 in.)
12 ≤ NPS ≤ 18	± 2.0 mm (± 0.06 in)
20 ≤ NPS	+ 3.0, – 2.0 mm (+ 0.12, – 0.06 in.)

(b) the outside diameter at welding ends (denoted as dimension *A* in ASME B16.25) having a valve not less than that shown for wrought or fabricated components.

In all cases, the thickness of the body run or nozzle transition (see para. 6.1.5) starting at a distance $2t_m$ from the buttwelding end, shall be no less than $0.77t_m$.

6.2.2 Flanged Ends. Flanged ends shall be prepared with flange facing, nut-bearing surfaces, outside diameter, thickness, and drilling in accordance with ASME B16.5 requirements for

(a) flanged fittings for Class 150 and 300 valves

(b) flanges for Class 600 and higher values

When required, valve end flanges may be furnished with tapped holes for engaging flange bolting. Thread engagement in a flange assembly with tapped holes shall provide full effective thread engagement, not including the chamfered thread, for a length at least equal to the nominal diameter of the bolt thread. For additional considerations, see para. 6.4.3.

6.2.3 Socket Welding Ends. The socket bore diameter, depth of socket, and end surfaces shall be in accordance with ASME B16.11. The minimum thickness of the socket wall extending over the socket depth, including any associated counterbore, shall be in accordance with Table 4.

6.2.4 Threaded Ends. End connections shall have taper pipe threads in accordance with ASME B1.20.1. The minimum thickness of the wall extending over the length of an internal thread, including any tap bore or counterbore, shall be in accordance with Table 4. Thread lengths and gaging requirements shall be in accordance with ASME B16.11.

6.2.5 Intermediate Rated Socket Welding and Threaded-End Valves. The minimum socket wall thickness and the minimum threaded-end wall thickness for valves with intermediate ratings may be determined by interpolation using the method of para. 6.1.4(b) using wall thickness values from Table 4.

6.2.6 End to End. End-to-end dimensions and face-to-face dimensions for buttwelding-end valves and for flanged-end valves shall be in accordance with ASME B16.10 or other dimensions by agreement between manufacturer and purchaser. For some valve types, both long and short pattern dimensions are listed in ASME B16.10. It should not be assumed that all designs of the type listed could be accommodated in the short pattern dimension series. For valve types not included in ASME B16.10, dimensions shall be the manufacturer's standard.

6.3 Auxiliary Connections

6.3.1 General. Auxiliary connections shall be designed, fabricated, and examined so as to warrant at least the same pressure-temperature ratings as the valve and shall be installed prior to the shell test of the valve to which they are attached, except that upon agreement between the manufacturer and purchaser, auxiliary connections installed after the valve shell tests are acceptable. Welded auxiliary connections shall be made by a qualified welder using a qualified welding procedure, both in accordance with ASME Boiler and Pressure Vessel Code, Section IX.

6.3.2 Pipe Thread Tapping. Holes may be tapped in the wall of a valve if the metal is thick enough to allow the effective thread length specified in Fig. 2. Where metal thickness is insufficient or the tapped hole needs reinforcement, a boss shall be added as shown in Fig. 5.

6.3.3 Socket Welding. Sockets may be provided in the wall of a valve if the metal is thick enough to accommodate the depth of socket and retaining wall specified in Fig. 3. Where the metal thickness is insufficient or the socket opening requires reinforcement, a boss shall be added as shown in Fig. 5. The length of the leg of the attachment weld shall be not less than 1.09 times the nominal pipe wall thickness of the auxiliary connection or 3.2 mm (0.12 in.), whichever is greater.

6.3.4 Butt Welding. Auxiliary connections may be attached by butt welding directly to the wall of the valve (see Fig. 4). Where the size of the opening is such that reinforcement is necessary, a boss shall be added as shown in Fig. 5.

6.3.5 Bosses. Where bosses are required, the inscribed diameters shall be not less than those shown in Fig. 5 and the height shall provide metal thickness to satisfy the requirements of Fig. 2 or 3.

6.3.6 Size. Unless otherwise specified, auxiliary connections shall be as follows:

Valve Size, NPS	Connection, NPS
2 ≤ NPS ≤ 4	½
5 ≤ NPS ≤ 8	¾
10 ≤ NPS	1

6.3.7 Designating Locations. A means of designating locations for auxiliary connections for some valve types is shown in Fig. 1. A letter designates each of these locations so that the desired locations for the illustrated types of valves may be specified without using further sketches or description.

6.4 Valve Joints

Valves with bolted or threaded bonnet or cover joints or body joints shall meet the following tensile or shear area requirements.

6.4.1 Bonnet or Cover Joints. Valve bonnet or cover joints, the joints between a valve body and a bonnet or cover are joints that are not subject to direct piping loads.

6.4.1.1 Bolted Bonnet or Cover Joints. Where bonnets or covers are joined to valve bodies by means of bolting, bolting shall be threaded in accordance with ASME B1.1 for inch dimensioned bolting or ASME B1.13M for metric bolting and, as a minimum, shall satisfy the following bolt cross-sectional area requirements:

$$P_c \frac{A_g}{A_b} \leq K_1 S_a \leq 9000$$

where

A_b = total effective bolt tensile stress area.

A_g = area bounded by the effective outside periphery of a gasket or O-ring or other seal-effective periphery, except that in the case of a ring-joint the bounded area is defined by the pitch diameter of the ring.

K_1 = 65.26/MPa when S_a is expressed in MPa units. (K_1 = 0.45/psi when S is expressed in psi units.)

P_c = pressure rating class designation (see Nonmandatory Appendix B, para. B-1.3)

S_a = allowable bolt stress at 38°C (100°F), MPa (psi). When greater than 137.9 MPa (20,000 psi), use 137.9 MPa (20,000 psi).

The allowable bolt stress values shall be taken from the ASME Boiler and Pressure Vessel Code, Section II, Part D using the listings for Section VIII, Division 1, or Section III, Division 1, Class 2 or Class 3. This algebraic expression requires that a consistent set of units be used.

6.4.1.2 Threaded Bonnet or Cover Joints. Where bonnets or covers are joined to valve bodies by means of threads, thread shear area, as a minimum, shall satisfy the following.

$$P_c \frac{A_g}{A_s} \leq 4200$$

where

A_s = total effective thread shear area

6.4.2 Body Joints. Valves with bodies of sectional construction such that bolted or threaded body joints are subject to piping mechanical loads shall, as a minimum, satisfy the following requirements.

6.4.2.1 Bolted Body Joints. Bolted body joints shall use bolting threaded in accordance with ANSI B1.1 for inch dimensional bolting or ASME B1.13M for metric bolting and, as a minimum, shall satisfy the following bolt cross-sectional area requirement.

$$P_c \frac{A_g}{A_b} \leq K_2 S_a \leq 7000$$

where

K_2 = 50.76/MPa when S_a is expressed in MPa units.
(K_2 = 0.35/psi when S_a is expressed in psi units)

This algebraic expression requires that a consistent set of units be used.

6.4.2.2 Threaded Body Joints. Threaded body joints shall, as a minimum, satisfy the following thread shear area requirement.

$$P_c \frac{A_g}{A_s} \leq 3300$$

6.4.3 Additional Considerations. Bolting or threading in excess of the minimum requirements of this Standard may be required because of, for example, valve design, special gasket compression requirements, special specified service conditions, or operation at high temperatures where differences in the creep characteristics between body and bolting materials could compromise joint sealing capability. Since these factors vary widely, these requirements must be accounted for by individual manufacturers.

6.5 Stems

Stems, variously referred to as spindles, shafts, or pins, are collectively identified herein as stems.

6.5.1 Stem Retention

6.5.1.1 Retention by Stem Seal Elements. Valves shall be designed so that the stem seal retaining fasteners (e.g., packing gland fasteners) alone do not retain the stem. Specifically, the design shall be such that the stem shall not be capable of removal from the valve, while the valve is under pressure, by the removal of the stem seal retainer (e.g., gland) alone.

6.5.1.2 Retention by Closure Member. Valves, including those intended for isolation, regulation, or flow reversal, shall be provided with a means so that, in the event of a structural failure of stem-to-closure attachment items, the stem will not be ejected through the pressure boundary while the valve is under pressure.

6.5.1.3 Material Deterioration. The requirements of para. 6.5.1.2 do not alter the user's responsibility for exercising control over in-service material deterioration or the need for periodic inspections. See para. 5.2.1.

6.5.2 Position Indication. Valves of the quarter-turn type (e.g., ball, plug, or butterfly) shall have a means to indicate the ball, plug, or disk position. The design shall be such that the components of the indicating means cannot be assembled to falsely indicate the valve open or closed position.

6.6 Installation Limitations

6.6.1 Single Flange Installation. Flanged and wafer or flangeless valves are intended for installation between flange pairs. These valves, however, can also be designed for installation against a single flange for the purpose of effecting closure in dead-end piping. Valves for the latter service shall be designed such that those parts necessary to support pressure loads acting across the seating element safely support the maximum differential pressure rating of the valve. Examples of such parts are end entry threaded seat retaining ferrules of ball valves and bolted seat seal retaining plates of butterfly valves. In the event that the valve design cannot accommodate these pressure loads, then the valve shall be marked to show such installation restriction.

6.6.2 Disk Clearance. Valves that can be bolted between flanges or against a flange (e.g., butterfly or swing check valves) may have a disk that will, upon rotation, project beyond the plane of the flange gasket. The valve design shall be such that there will be no interference between the valve disk and companion flanges or adjacent piping for the following pipe schedules.

Pressure Class	Valve Size, NPS	Pipe Schedule
150	2 ≤ NPS ≤ 24	40
300	2 ≤ NPS ≤ 24	80
600	2 ≤ NPS ≤ 6	80
600	8 ≤ NPS ≤ 14	100

For other valve sizes and pressure classes, pipe inside diameter and disk clearance shall be as agreed between manufacturer and purchaser.

6.7 Wafer or Flangeless Valves

The design of valves that can be bolted between flanges or against a flange (e.g., butterfly valves) shall conform to the applicable requirements for flanged valves and the requirements of paras. 6.7(a) through (f) (see Fig. 17).

(a) The design shall provide for boltup using all of the bolt holes and bolt circle of the specified flange.

(b) Bolt holes, parallel to the body run, may be either threaded or unthreaded. Threaded holes may be blind holes suitable for use with bolt studs. When threaded, full-thread engagement, excluding chamfers, shall be provided to a depth not less than one nominal bolt diameter.

(c) The required minimum valve body wall thickness, t_m, shall be measured from the valve body inside circumference out to the lesser of the valve body outside circumference or the circumference of a circle inscribed through the inner tangent points to the flange bolt holes.

(d) The inner ligament (*e* of Fig. 17) of either a through-hole or a blind threaded hole in the vicinity of a stem penetration shall not be less than 25% of the required wall thickness of the body neck but in no case less than 2.5 mm (0.1 in.).

(e) The inner ligament (*f* and *g* of Fig. 17) for holes parallel to the body run shall not be less than $0.25t_m$ but in no case less than 2.5 mm (0.1 in.). The sum of the inner and outer ligaments shall not be less than t_m.

(f) A ligament within the minimum body wall between two adjacent holes within the minimum body wall (*j* of Fig. 17) shall be $0.25t_m$ or greater but not less than 2.5 mm (0.1 in.).

7 PRESSURE TESTING

7.1 Shell Test

7.1.1 Shell Test Pressure. Each valve shall be given a shell test at a gage pressure no less than 1.5 times the 38°C (100°F) pressure rating, rounded off to the next higher 1 bar (25 psi) increment. The test shall be made with water, which may contain a corrosion inhibitor, with kerosene, or with other suitable fluid,[3] provided such fluid has viscosity not greater than that of water, at a temperature not above 50°C (125°F). The test shall be made with the valve in the partially open position.

7.1.2 Test Duration. The shell test duration, the test perod of inspection after the valve is fully prepared and is under shell test pressure, shall be not less than the following:

Valve Size	Test Time, sec
NPS ≤ 2	15
2½ ≤ NPS ≤ 8	60
10 ≤ NPS	180

7.1.3 Acceptability. Visually detectable leakage through pressure boundary walls is not acceptable. Leakage through the stem packing shall not be cause for rejection. However, stem seals shall be capable of retaining pressure at least equal to the 38°C (100°F) rating without visible leakage.

[3] There are hazards involved when gas is the fluid for testing. When gas is used, appropriate precautions are required.

7.2 Valve Closure Tests[4]

7.2.1 Closure Test Pressure. Each valve designed for shut-off or isolation service, such as a stop valve, and each valve designed for limiting flow reversal, such as a check valve, shall be given a closure test. The closure test shall follow the shell test except that for valves NPS 4 and smaller with ratings Class 1500 and lower the closure test may precede the shell test when a gas closure test is used. The test fluid shall be as in para. 7.1. The test pressure shall be not less than 110% of the 38°C (100°F) pressure rating except that, at the manufacturer's option, a gas closure test at gage pressure not less than 5.5 bar (80 psi) may be substituted for valve sizes and pressure classes as follows.

Valve Size, NPS	Pressure Class
NPS ≤ 4	$P_c \leq 2500$
NPS ≤ 12	$P_c \leq 300$

7.2.2 Closure Test Duration. The closure test duration, the test period of inspection after the valve is fully prepared and is under full pressure, shall not be less than the following.

Valve Size	Test Time, sec
NPS ≤ 2	15
2½ ≤ NPS ≤ 8	30
10 ≤ NPS ≤ 18	60
20 ≤ NPS	120

7.2.3 Double Seating. For valves of the double seating type, such as most gate and ball valves, the test pressure shall be applied successively on each side of the closed valve. The closure test shall include a method that fills the body cavity between the seats and the bonnet cavity with test fluid. As an alternative method, for valves with independent double seating (such as double disk gate valves), the pressure may be applied inside the bonnet or body with the disks closed.

7.2.4 Directional Seating. For other valve types, the test pressure shall be applied across the closure member in the direction producing the most adverse seating condition. For example, a globe valve shall be tested with pressure under the disk. A check valve, globe valve, or other valve type designed to be sold and marked as a one-way valve requires a closure test only in the appropriate direction.

7.2.5 Restricted Seating. Valves conforming to this Standard in all respects, except that they are designed for operating conditions that have the pressure differential across the closure member limited to values less than the 38°C (100°F) pressure rating and have closure members and/or actuating devices (direct, mechanical, fluid, or

[4] Closure tightness requirements vary with intended service application and are not within the scope of this Standard. For guidance in this regard see, for example, MSS SP061, API-598, or ISO 5208.

electrical) that would be subject to damage at high differential pressures, shall be tested as described in the preceding paragraphs except that the closure test requirement may be reduced to 110% of the maximum specified closed position differential pressure. This exception may be exercised as agreed between the user and manufacturer. The manufacturer's nameplate data shall include reference to any such limitations (see para. 4.3.3).[5]

7.3 Leakage Detection Devices

Leakage detection devices, e.g., pressure decay devices, may be used for detecting leakage provided that they are used at the pressures required for the shell and closure tests of paras. 7.1 and 7.2. When used, the valve manufacturer shall have demonstrated that the test results are equivalent to the requirements of paras. 7.1 and 7.2.

7.4 Surface Protection

Valves shall not be painted or otherwise coated with materials capable of sealing against leakage before the shell tests are completed except that

(a) internal linings or coatings included in the design, e.g., nonmetal butterfly valve linings, are permitted

(b) chemical corrosion protection treatment is permitted

(c) assembled valves having bodies and bonnets or cover plates that have been separately tested in accordance with para. 7.1, prior to having been painted or coated, may be painted or coated prior to final testing in accordance with para. 7.1

8 REQUIREMENTS FOR SPECIAL CLASS VALVES

8.1 Scope

This section defines the nondestructive examination (NDE) requirements and the rules for defect removal and repair for cast, forged, rolled, wrought, and fabricated valve bodies and bonnets or covers which are intended for use in Special Class valves.

8.2 General

Nondestructive examinations shall be performed on the cast, forged, rolled, wrought, or fabricated material after heat treatment required by the material specification either prior to or after the finish machining at the option of the manufacturer. Surfaces shall be clean and free of surface conditions which may mask unacceptable indications. Accessible surfaces (see paras. 8.3.1.2 and 8.3.2.2) do not include threads, drilled or threaded holes, for example, for bolting, packing, stems, or auxiliary connections.

[5] Performance testing of valve actuating devices is not within the scope of this Standard.

8.3 Required Examination

8.3.1 Castings

8.3.1.1 Radiographic Examination. The radiographic procedures and acceptance standards to be used shall be in accordance with Mandatory Appendix I. Body and bonnet or cover sections requiring radiography are as given in this paragraph and as shown typically in Figs. 6 through 16. For body and bonnet configurations not represented, it is permissible to construct a composite coverage area based on these illustrations and the descriptions that follow. The distance A over which film coverage is required, is expressed in multiples of t_m where t_m is the minimum wall thickness requirement as determined by para. 6.1. The value for film coverage of A is intended to be the greater of $3t_m$ or 70 mm (2.75 in.). It should be recognized, however, that in some cases the specified value of A will exceed the intent of the film coverage area as illustrated in Figs. 6 through 16. For example, in Fig. 11 the body neck or run sections may not accommodate the full value of A as defined. In such cases the requirement may be satisfied by providing film coverage substantially as shown in the sketches. Also, if the full defined coverage width A would result in the film running substantially into an adjacent fillet or crotch section, the value of A may be reduced to a practical maximum value. Small variations in coverage are permitted when necessary to accommodate standard film sizes. Film coverage shall include the following areas.

(a) Body

(1) a band around each weld end extending back from the body end a distance equal to the greater of $3t_m$ or 70 mm (2.75 in.)

(2) a band around the bonnet neck extending down from the top of body on pressure seal valves and from back of the flange on bolted bonnet valves a distance equal to the greater of $3t_m$ or 70 mm (2.75 in.)

(3) a band in the area of the junction between each seat and body shell having a width equal to the greater of $3t_m$ or 70 mm (2.75 in.) and an encompassing girth extending between the fillets of the intersecting sections, e.g., as shown approximately 210 deg for Fig. 6

(b) Bonnet. The junction of the stem seal chamber with the bonnet closure plate or flange.

(c) Cover

(1) volumetric examination is not required for flat covers with or without raised faces

(2) for dished covers, a band in the vicinity of the junction between the dished and flanged sections having a width equal to the greater of $3t_m$ or 70 mm (2.75 in.)

8.3.1.2 Surface Examination. All exterior and all accessible interior surfaces of body, bonnet, and cover castings shall be given a surface examination. Table 1, Group 1 materials shall be given either a magnetic particle examination or a liquid penetrant examination. Table 1, Groups 2 and 3 materials shall be given a liquid penetrant

examination. Magnetic particle examinations shall be in accordance with the procedure and acceptance standards of Mandatory Appendix II. Liquid penetrant examinations shall be in accordance with the procedure and acceptance standards of Mandatory Appendix III.

8.3.1.3 Ultrasonic Examination. An ultrasonic examination of the casting in accordance with para. 8.3.2.1 may be substituted for the radiographic examination, provided that the user agrees and that it can be demonstrated by the manufacturer that the ultrasonic examination produces interpretable results. The extent of coverage shall be as typically shown in Figs. 6 through 16.

8.3.2 Forgings, Bars, Plates, and Tubular Products

8.3.2.1 Ultrasonic or Radiographic Examination. The following material sections shall be ultrasonically examined in accordance with the procedure and acceptance standards in Mandatory Appendix IV or radiographically examined in accordance with the procedure and acceptance standards in Mandatory Appendix I.

(a) Body: cylindrical sections at run ends and body neck

(b) Bonnet: ring section excluding stuffing box and yoke arms

(c) Cover

(1) for dished covers, a band in the vicinity of the junction between the dished and flanged sections having a width equal to the greater of $3t_m$ or 70 mm (2.75 in.)

(2) volumetric examination is not required for flat covers with or without raised faces

If, during the examination, ultrasonic indications are noninterpretable due to, for example, grain size, the material shall be radiographed using the procedure requirements of para. 8.3.1.1. Subsurface linear indications are unacceptable when they exceed

(a) 4.8 mm (0.19 in.) long in sections under 13 mm (0.5 in.) thick

(b) 9.6 mm (0.38 in.) long in sections 13 mm to 25 mm (0.5 in. to 1 in.) thick

(c) 19.0 mm (0.75 in.) long in sections over 25 mm (1 in.) thick

8.3.2.2 Surface Examination. All exterior and all accessible interior surfaces of bodies, bonnets, and covers shall be given a surface examination. Table 1, Group 1 materials shall be given either a magnetic particle examination or a liquid penetrant examination. Table 1, Groups 2 and 3 materials shall be given a liquid penetrant examination. Magnetic particle examinations shall be in accordance with the procedure and acceptance standards of Mandatory Appendix II. Liquid penetrant examinations shall be in accordance with the procedure and acceptance standards of Mandatory Appendix III.

8.3.3 Welded Fabrication. Bodies and bonnets made by weld assembly of segments of castings, forgings, bars, tubular products, or plates, or combinations thereof, including fabrication welds, shall be examined as applicable by the methods of para. 8.3.1 for cast components, or para. 8.3.2 for forged, rolled, or wrought components. In addition, all fabrication welds shall receive nondestructive examination in accordance with the ASME Boiler and Pressure Vessel Code, Section VIII, Division 1, in a manner that results in a weld joint efficiency of 1.0. These requirements are not applicable to welds such as may be used for backseat bushings, seat rings, lifting lugs, and auxiliary connections.

8.4 Defect Removal and Repair

8.4.1 Defect Removal. Defects in excess of acceptance standards shall be removed by suitable means. If removal of surface defects to an acceptable level does not result in reducing wall thickness below an acceptable value, the area shall be blended smoothly into the surrounding surface.

8.4.2 Repair by Welding. Where defect removal results in a wall thickness below an acceptable value, the resultant cavity may be repaired by welding, provided that all of the following requirements are satisfied.

(a) The welding procedure and welding operator are qualified in accordance with ASTM A 488 or the ASME Boiler and Pressure Vessel Code, Section IX.

(b) Weld repairs to fabrication welds are made in accordance with the ASME Boiler and Pressure Vessel Code, Section VIII, Division 1.

(c) Weld repairs are heat treated in accordance with the postweld heat treatment requirements of the ASME Boiler and Pressure Vessel Code, Section VIII, Division 1, Subsection C. The exemptions applicable to fabrication welds including groove, fillet, and circumferential butt welds also apply to repair welds. Postweld heat treatment (solution treatment) of repair welds in austenitic stainless steels is neither required nor prohibited except when required by the material specification.

(d) The area is reexamined by the NDE method which originally disclosed the defect. The reexamination by magnetic particle or liquid penetrant methods of a repaired area originally disclosed by magnetic particle or liquid penetrant examination shall be performed after postweld heat treatment when postweld heat treatment is performed. The reexamination by radiography or ultrasonic methods of a repaired area originally disclosed by radiography or ultrasonic examination may be performed either before or after postweld heat treatment when postweld heat treatment is performed. The acceptance standards shall be as in the original examination.

(e) Weld repairs made as a result of radiographic examination shall be radiographed after welding. The acceptance standards for porosity and slag inclusion in welds shall be in accordance with the ASME Boiler and Pressure Vessel Code, Section VIII, Division 1, UW-51.

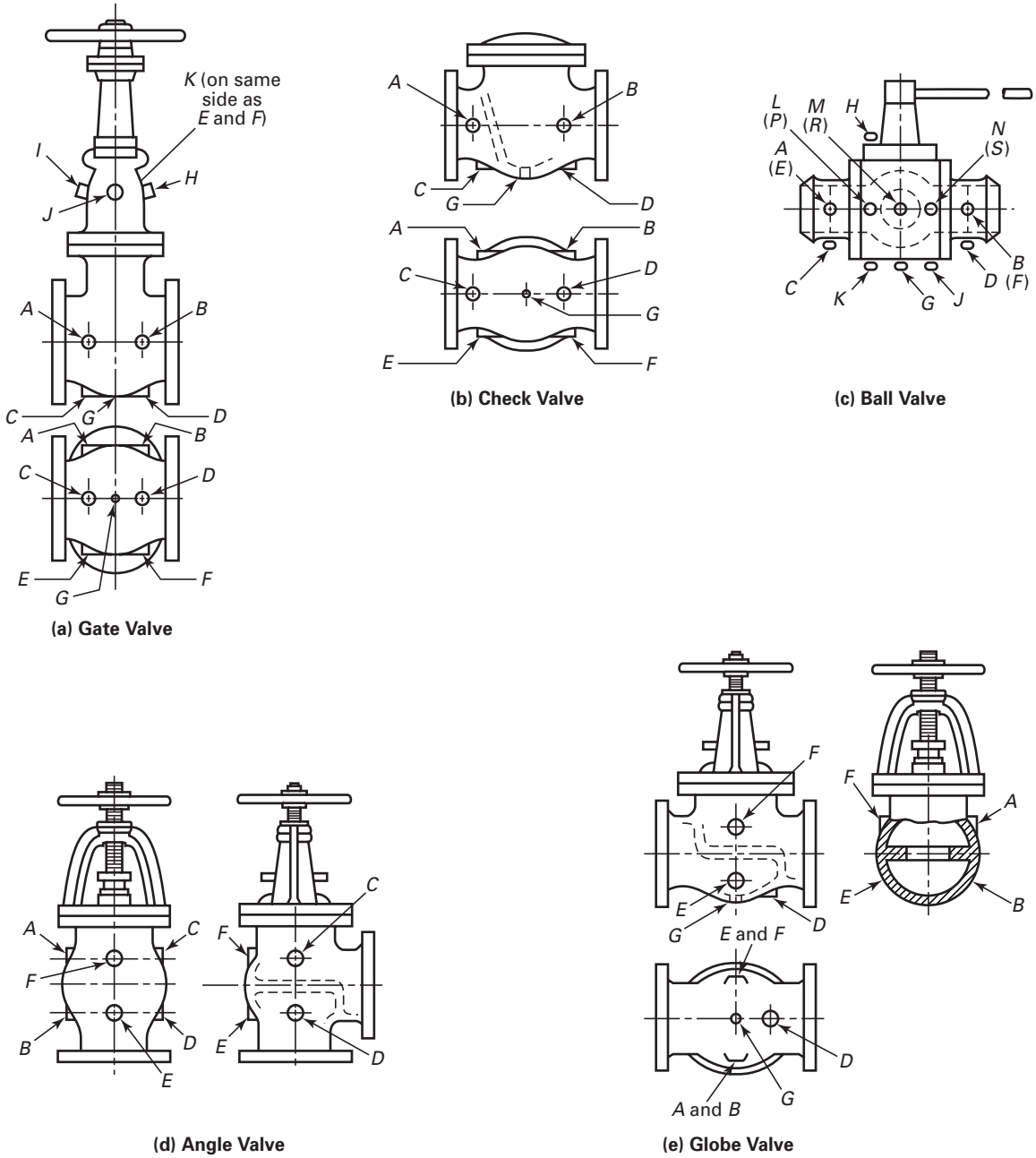

GENERAL NOTE: The above sketches represent valves with symmetrical shapes. Sketches are illustrative only and do not imply design (see para. 6.3.7).

Fig. 1 Method of Designating Location of Auxiliary Connections When Specified

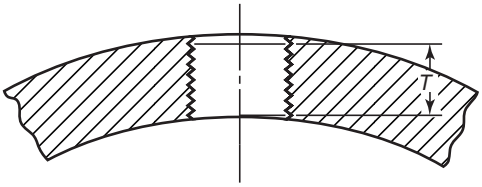

Connection size	NPS	3/8	1/2	3/4	1	1 1/4	1 1/2	2
Minimum effective thread length, *T*	mm	10.5	13.5	14.0	17.3	18.0	18.3	19.3
	in.	0.41	0.53	0.55	0.68	0.71	0.72	0.76

GENERAL NOTE: The minimum thread lengths are for effective threads in accordance with the effective external pipe thread length as given in ASME B1.20.1.

Fig. 2 Thread Length for Auxiliary Connections (See para. 6.3.2)

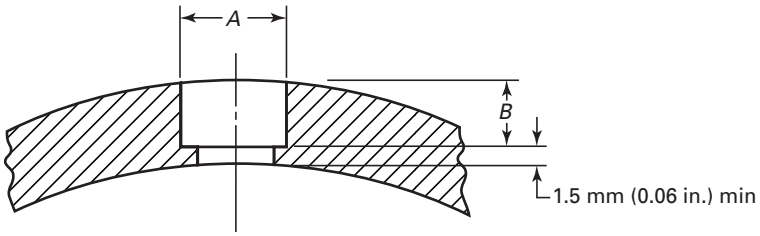

Connection size	NPS	3/8	1/2	3/4	1	1 1/4	1 1/2	2
Minimum socket depth, *A*	mm	17.53	21.72	27.05	33.78	42.54	49.53	61.11
	in.	0.690	0.855	1.065	1.330	1.675	1.195	2.406
Minimum socket depth, *B*	mm	4.8	4.8	6.4	6.4	6.4	6.4	7.9
	in.	0.19	0.19	0.25	0.25	0.25	0.25	0.31

Fig. 3 Socket Welding for Auxiliary Connections (See para. 6.3.3)

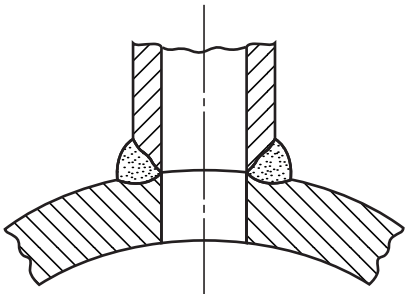

Fig. 4 Butt Welding for Auxiliary Connections (See para. 6.3.4)

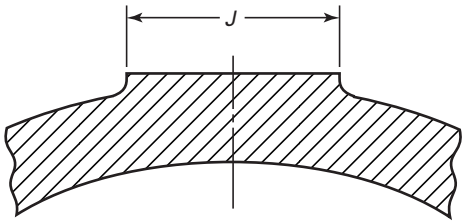

Connection size	NPS	3/8	1/2	3/4	1	1 1/4	1 1/2	2
Nominal Boss dia., *J*	mm	31	38	44	53	63	69	85
	in.	1.25	1.50	1.75	2.12	2.50	2.75	3.38

Fig. 5 Bosses for Auxiliary Connections (See para. 6.3.5)

Typical casting sections showing required radiographic examination

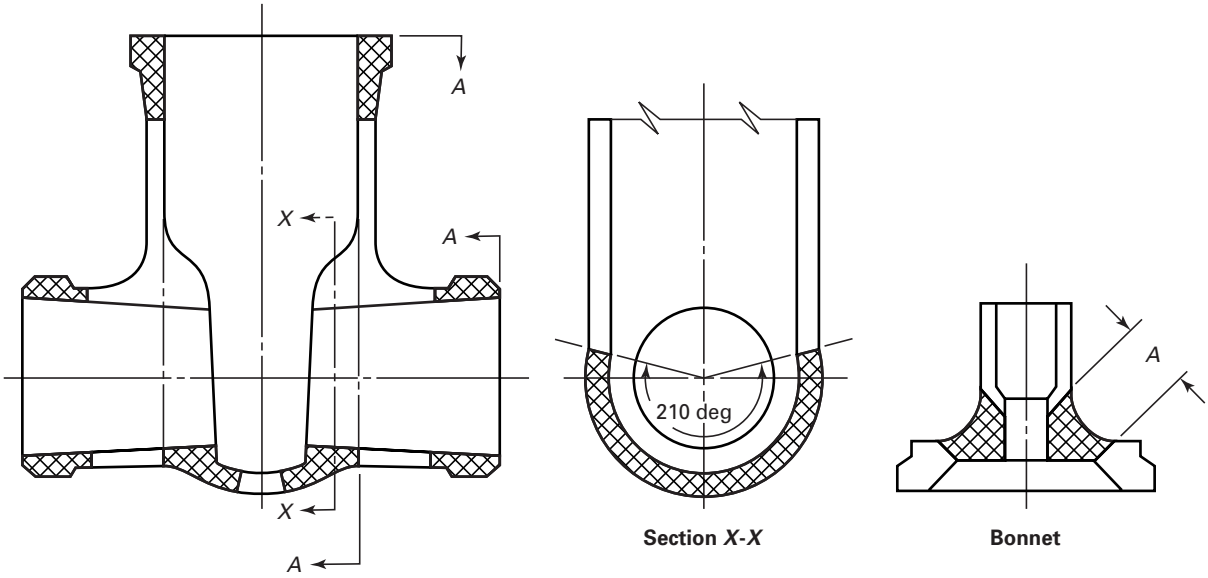

GENERAL NOTE: For definition of "*A*", see para. 8.3.1.1.

Fig. 6 Gate Body (Pressure Seal Bonnet)

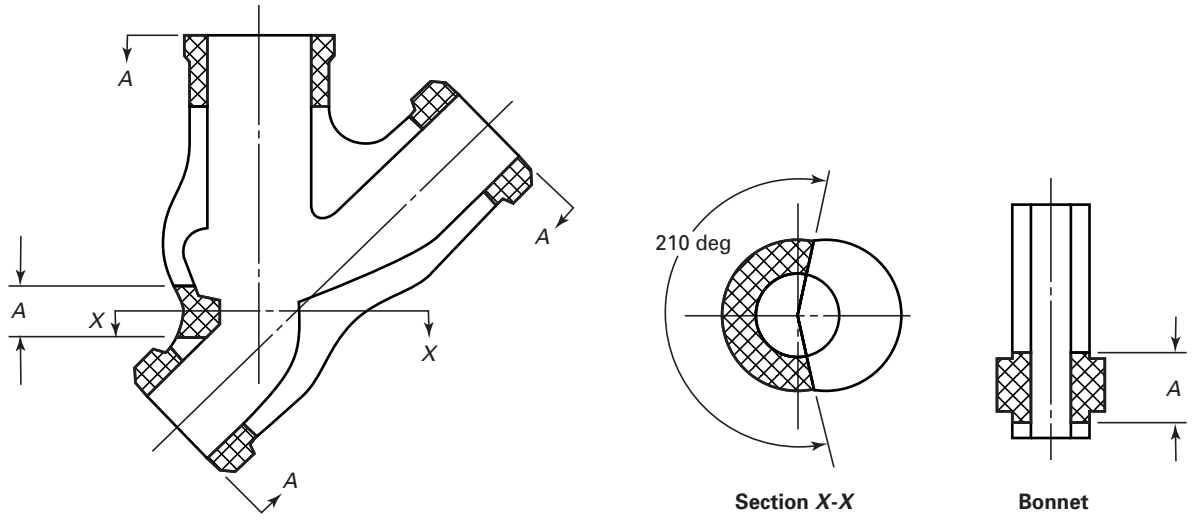

GENERAL NOTE: For definition of "*A*", see para. 8.3.1.1.

Fig. 7 *Y* Pattern Globe Body (Pressure Seal Bonnet)

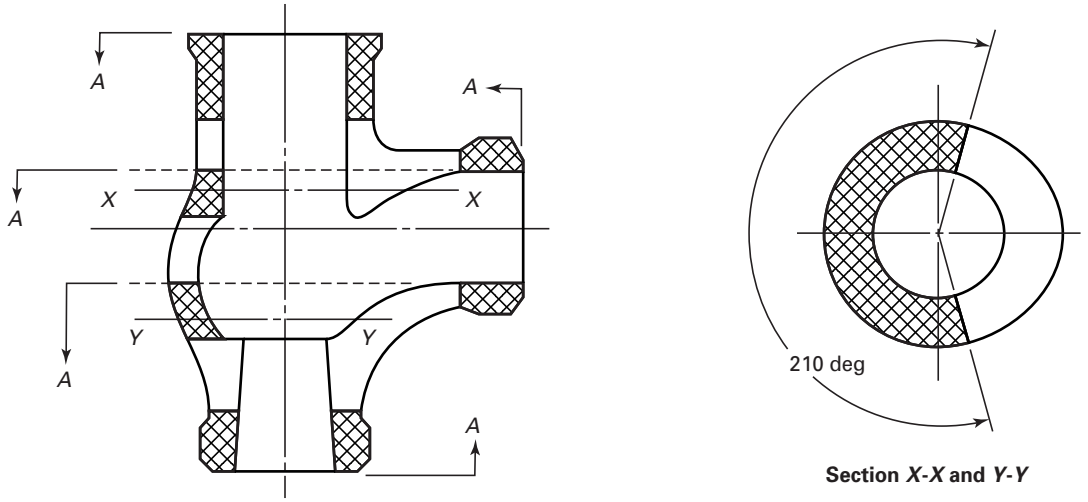

GENERAL NOTE: For definition of "*A*", see para. 8.3.1.1.

Fig. 8 Angle Body (Pressure Seal Bonnet)
Bonnet Same As *Y* Pattern Globe

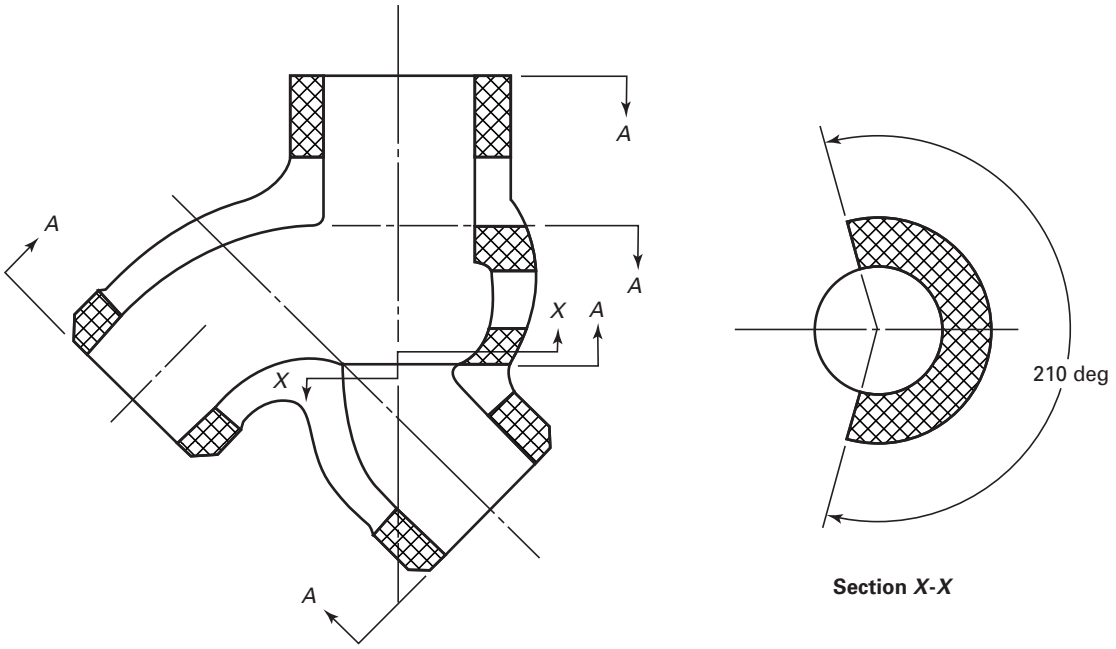

GENERAL NOTE: For definition of "*A*", see para. 8.3.1.1.

Fig. 9 Elbow Down (Pressure Seal Bonnet)

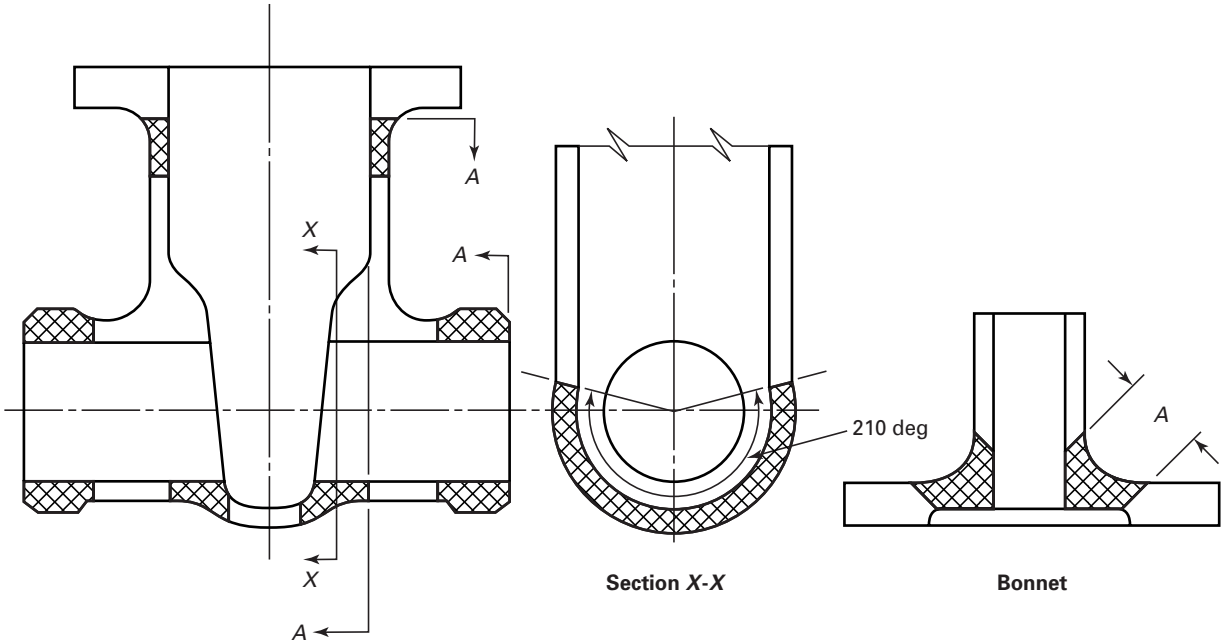

GENERAL NOTE: For definition of "*A*", see para. 8.3.1.1.

Fig. 10 Gate Body (Flanged Bonnet)

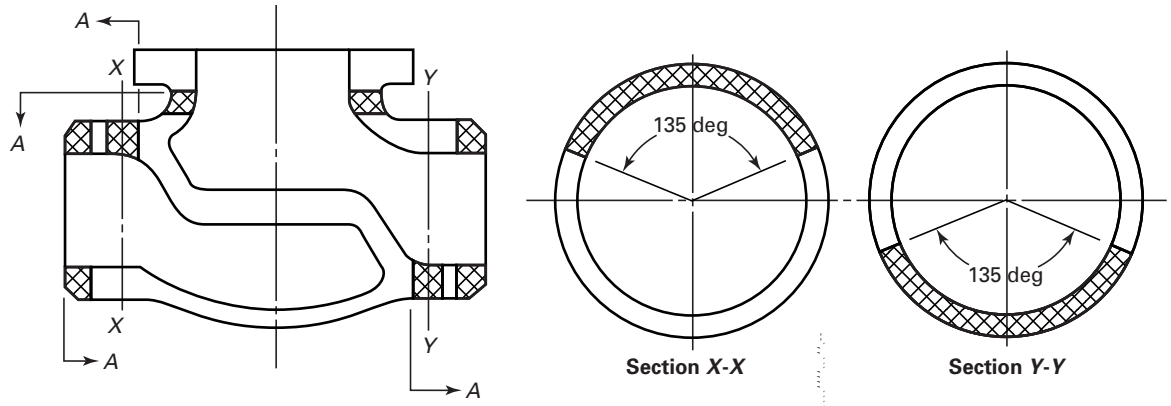

GENERAL NOTE: For definition of "*A*", see para. 8.3.1.1.

Fig. 11 Globe Body (Flanged Bonnet)

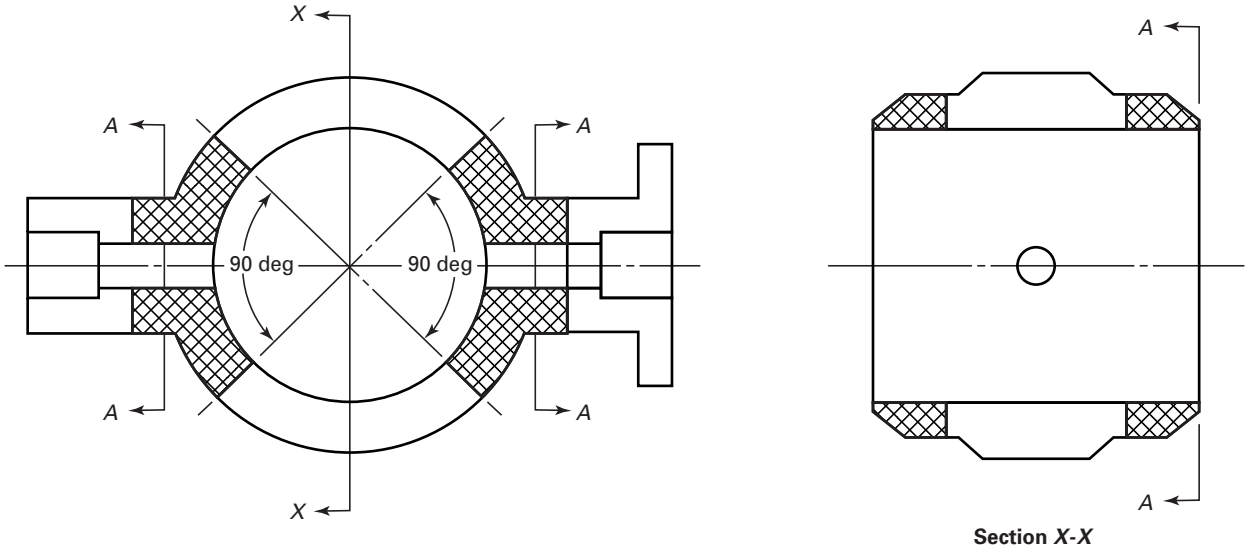

GENERAL NOTE: For definition of "*A*", see para. 8.3.1.1.

Fig. 12 Butterfly Body

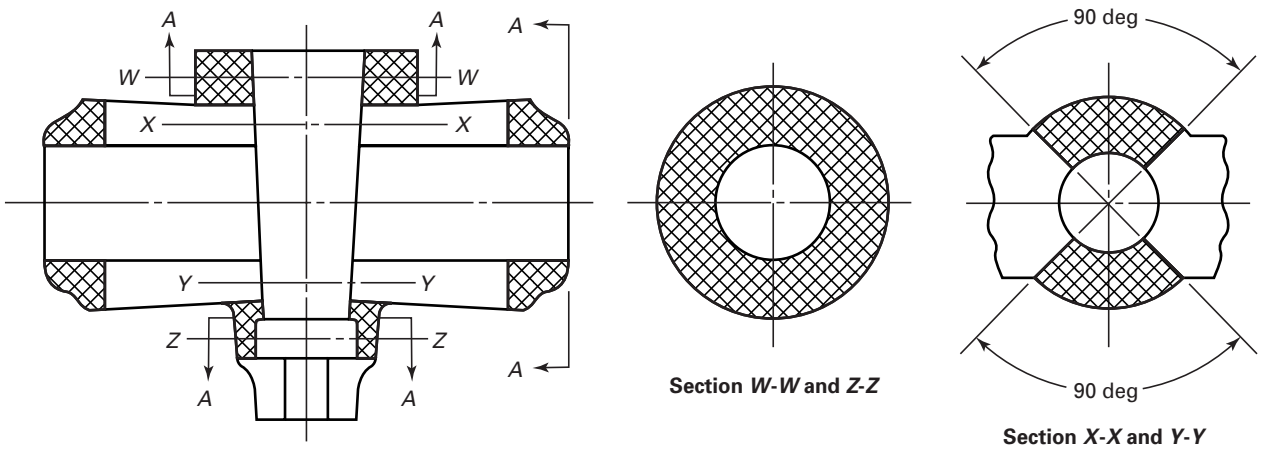

GENERAL NOTE: For definition of "*A*", see para. 8.3.1.1.

Fig. 13 Plug Body

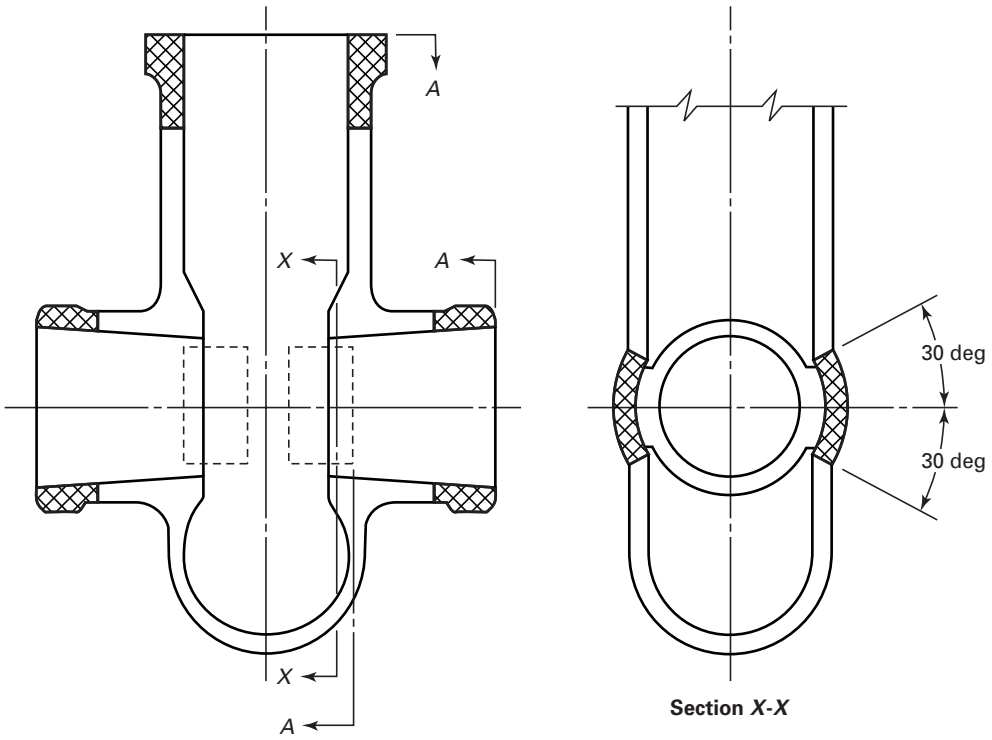

GENERAL NOTE: For definition of "*A*", see para. 8.3.1.1.

Fig. 14 Conduit Gate Body (Pressure Seal Bonnet)

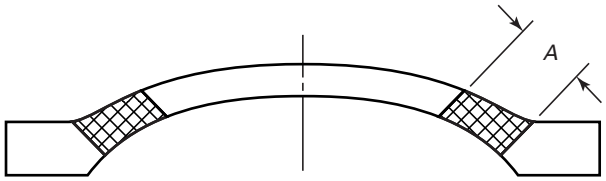

GENERAL NOTE: For definition of "*A*", see para. 8.3.1.1.

Fig. 15 Dished Cover

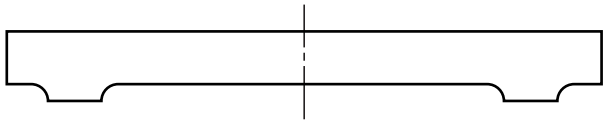

Fig. 16 Flat Cover

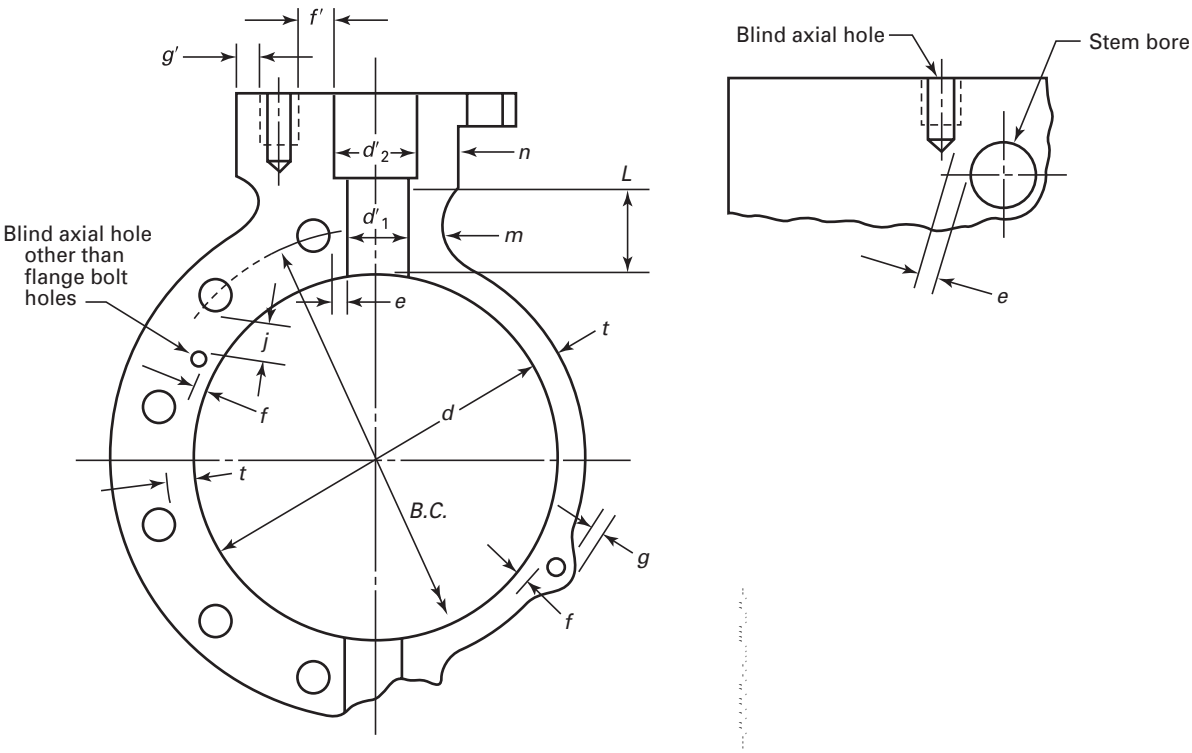

Relationship	Notes	Reference
$t \geq t_m$	1	6.1.1
$m \geq t'_1$	1	6.1.3(c)
$n \geq t'_2$	1 and 2	6.1.3(c)
$e \geq 0.25\ t'$	3	6.7(d)
$f \geq 0.25\ t_m$ and $f + g \geq t_m$	3	6.7(e)
$g \geq 0.25\ t_m$ and $f + g \geq t_m$	3	6.7(e)
$j \geq 0.25\ t_m$	3	6.7(f)
d = flow passage dia.	. . .	6.1.2
d' = local dia. in valve body neck	. . .	6.1.3(c)
$L \geq t_m\left(1 + 1.1\sqrt{d/t_m}\right)$ applies when $d/d' \geq 4$	. . .	6.1.3(c)
$f' \geq 0.25\ t'_2$ and $f' + g' \geq t'_2$	. . .	6.1.3(d)
$g' \geq 0.25\ t'_2$ and $f' + g' \geq t'_2$	. . .	6.1.3(d)

NOTES:
(1) Except where para. 6.1.6 applies.
(2) If d'_2 is located outside the stem seal, i.e., beyond the internal wetted perimeter, the minimum thickness requirements shall be determined by the manufacturer.
(3) In no case less than 3 mm (0.1 in.).

Fig. 17 Butterfly Valve Body

Table 1 Material Specification List: Applicable ASTM Specification

GROUP 1 MATERIALS

Material Group No.	Nominal Designation	Forgings		Castings		Plates		Bars		Tubular	
		Spec. No.	Grade	Spec. No.	Grade	Spec. No.	Grade	Spec. No.	Grade	Spec. No.	Grade
1.1	C–Si	A 105		A 216	WCB	A 515	70	A 105			
	C–Mn–Si	A 350	LF2			A 516	70	A 350	LF2	A 672	C 70
						A 537	Cl. 1	A 696	C		B 70
	$3\frac{1}{2}$Ni	A 350	LF3								
	C–Mn–Si–V	A 350	LF6 Cl. 1								
1.2	C–Si									A 106	C
	$2\frac{1}{2}$Ni			A 352	LC2	A 203	B				
	$3\frac{1}{2}$Ni			A 352	LC3	A 203	E				
	C–Mn–Si			A 216	WCC						
				A 352	LCC						
	C–Mn–Si–V	A 350	LF6 Cl. 2								
1.3	C							A 675	70		
	C–Si			A 352	LCB	A 515	65			A 672	B 65
	$2\frac{1}{2}$Ni					A 203	A				
	$3\frac{1}{2}$Ni					A 203	D				
	C–Mn–Si					A 516	65			A 672	C 65
	C–$\frac{1}{2}$Mo			A 217	WC1						
				A 352	LC1						
1.4	C							A 675	60		
								A 675	65		
	C–Si					A 515	60			A 106	B
										A 672	B 60
	C–Mn–Si	A 350	LF1			A 516	60	A 350	LF1	A 672	C 60
								A 696	B		
1.5	C–$\frac{1}{2}$Mo	A 182	F1			A 204	A	A 182	F1	A 691	CM–70
						A 204	B				
1.6	$\frac{1}{2}$Cr–$\frac{1}{2}$Mo					A 387	2 Cl. 1			A 691	$\frac{1}{2}$Cr
						A 387	2 Cl. 2				
1.7	C–$\frac{1}{2}$Mo									A 691	CM–75
	$\frac{1}{2}$Cr–$\frac{1}{2}$Mo	A 182	F2					A 182	F2		
	Ni–$\frac{1}{2}$Cr–$\frac{1}{2}$Mo			A 217	WC4						
	$\frac{3}{4}$Ni–Mo–$\frac{3}{4}$Cr			A 217	WC5						
1.8	1Cr–$\frac{1}{2}$Mo					A 387	12 Cl. 2				
	$1\frac{1}{4}$Cr–$\frac{1}{2}$Mo–Si					A 387	11 Cl. 1			A 691	$1\frac{1}{4}$Cr
	$2\frac{1}{4}$Cr–1Mo					A 387	22 Cl. 1			A 691	$2\frac{1}{4}$Cr
										A 335	P22
										A 369	FP22
1.9	$1\frac{1}{4}$Cr–$\frac{1}{2}$Mo–Si	A 182	F11 Cl. 2			A 387	11 Cl. 2	A 182	F11 Cl. 2		
	$1\frac{1}{4}$Cr–$\frac{1}{2}$Mo			A 217	WC6			A 739	B11		
1.10	$2\frac{1}{4}$Cr–1Mo	A 182	F22 Cl. 3	A 217	WC9	A 387	22 Cl. 2	A 182	F22 Cl. 3		
								A 739	B22		
1.11	3Cr–1Mo	A 182	F21			A 387	21 Cl. 2	A 182	F21		
	Mn–$\frac{1}{2}$Mo					A 302	A & B				
	Mn–$\frac{1}{2}$Mo–$\frac{1}{2}$Ni					A 302	C				
	Mn–$\frac{1}{2}$Mo–$\frac{3}{4}$Ni					A 302	D				
	C–Mn–Si					A 537	CL2				
	C–$\frac{1}{2}$Mo					A 204	C				
1.12	5Cr–$\frac{1}{2}$Mo					A 387	5 Cl. 1			A 691	5Cr
						A 387	5 Cl. 2			A 335	P5
										A 369	FP5
	5Cr–$\frac{1}{2}$Mo–Si									A 335	P5b

Table 1 Material Specification List: Applicable ASTM Specification (Cont'd)

Material Group No.	Nominal Designation	Forgings		Castings		Plates		Bars		Tubular	
		Spec. No.	Grade	Spec. No.	Grade	Spec. No.	Grade	Spec. No.	Grade	Spec. No.	Grade
GROUP 1 MATERIALS (CONT'D)											
1.13	5Cr–½Mo	A 182	F5a	A 217	C5			A 182	F5a		
1.14	9Cr–1Mo	A 182	F9	A 217	C12			A 182	F9		
1.15	9Cr–1Mo–V	A 182	F91	A 217	C12A	A 387	91 Cl. 2	A 182	F91	A 335	P91
1.16	C–½Mo									A 335	P1
										A 369	FP1
	1Cr–½Mo					A 387	12 Cl. 1			A 691	1Cr
										A 335	P12
										A 369	FP12
	1¼Cr–½Mo–Si									A 335	P11
										A 369	FP11
1.17	1Cr–½Mo	A 182	F12 Cl. 2								
	5Cr–½Mo	A 182	F5					A 182	F5		
GROUP 2 MATERIALS											
2.1	18Cr–8Ni	A 182	F304	A 351	CF3	A 240	304	A 182	F304	A 312	TP304
		A 182	F304H	A 351	CF8	A 240	304H	A 182	F304H	A 312	TP304H
								A 479	304	A 358	304
								A 479	304H	A 376	TP304
										A 376	TP304H
										A 430	FP304
										A 430	FP304H
2.2	16Cr–12Ni–2Mo	A 182	F316	A 351	CF3M	A 240	316	A 182	F316	A 312	TP316
		A 182	F316H	A 351	CF8M	A 240	316H	A 182	F316H	A 312	TP316H
								A 479	316	A 358	316
								A 479	316H	A 376	TP316
										A 376	TP316H
										A 430	FP316
										A 430	FP316H
	18Cr–8Ni			A 351	CF3A						
	18Cr–13Ni–3Mo	A 182	F317			A 240	317			A 312	TP317
		A 182	F317H	A 351	CF8A	A 240	317H			A 312	TP317H
	19Cr–10Ni–3Mo			A 351	CG8M						
2.3	18Cr–8Ni	A 182	F304L			A 240	304L	A 182	F304L	A 312	TP304L
								A 479	304L		
	16Cr–12Ni–2Mo	A 182	F316L			A 240	316L	A 182	F316L	A 312	TP316L
								A 479	316L		
2.4	18Cr–10Ni–Ti	A 182	F321			A 240	321	A 182	F321	A 312	TP321
		A 182	F321H			A 240	321H	A 479	321	A 312	TP321H
								A 182	F321H	A 358	321
								A 479	321H	A 376	TP321
										A 376	TP321H
										A 430	FP321
										A 430	FP321H
2.5	18Cr–10Ni–Cb	A 182	F347			A 240	347	A 182	F347	A 312	TP347
		A 182	F347H			A 240	347H	A 182	F347H	A 312	TP347H
		A 182	F348			A 240	348	A 182	F348	A 312	TP348
		A 182	F348H			A 240	348H	A 182	F348H	A 312	TP348H
								A 479	347	A 358	TP347
								A 479	347H	A 376	TP347
								A 479	348	A 376	TP347H
								A 479	348H	A 376	TP348
										A 376	TP348H
										A 430	FP347
										A 430	FP347H

Table 1 Material Specification List: Applicable ASTM Specification (Cont'd)

GROUP 2 MATERIALS (CONT'D)

Material Group No.	Nominal Designation	Forgings		Castings		Plates		Bars		Tubular	
		Spec. No.	Grade	Spec. No.	Grade	Spec. No.	Grade	Spec. No.	Grade	Spec. No.	Grade
2.6	23Cr–12Ni									A 312	TP309H
						A 240	309H			A 358	309H
2.7	25Cr–20Ni	A 182	F310H			A 240	310H	A 182	F310H	A 312	TP310H
								A 479	310H	A 358	310H
2.8	20Cr–18Ni–6Mo	A 182	F44	A 351	CK3MCuN	A 240	S31254	A 479	S31254	A 312	S31254
										A 358	S31254
	22Cr–5Ni–3Mo–N	A 182	F51			A 240	S31803	A 479	S31803	A 789	S31803
										A 790	S31803
	25Cr–7Ni–4Mo–N	A 182	F53			A 240	S32750	A 479	S32750	A 789	S32750
										A 790	S32750
	24Cr–10Ni–4Mo–V			A 351	CE8MN						
	25Cr–5Ni–2Mo–3Cu			A 351	CD4MCuN						
	25Cr–7Ni–3.5Mo–W–Cb			A 351	CD3MWCuN					A 789	S32760
	25Cr–7Ni–3.5Mo–N–Cr–W	A 182	F55			A 240	S32760			A 790	S32760
2.9	23Cr–12Ni					A 240	309S				
	25Cr–20Ni					A 240	310S	A 479	310S		
2.10	25Cr–12Ni			A 351	CH8						
				A 351	CH20						
2.11	18Cr–10Ni–Cb			A 351	CF8C						
2.12	25Cr–20Ni			A 351	CK20						
GROUP 3 MATERIALS											
3.1	35Ni–35Fe–20Cr–Cb	B 462	NO8020			B 463	N08020	B 473	N08020	B 464	N08020
										B 468	N08020
3.2	99Ni	B 160	N02200			B 162	N02200	B 160	N02200	B 161	N02200
										B 163	N02200
3.3	99Ni–Low C	B 160	NO2201			B 162	N02201	B 160	N02201		
3.4	67Ni–30Cu	B 164	NO4400			B 127	N04400	B 164	N04400	B 165	N04400
										B 163	N04400
	60Ni–22Cr–9Mo–3.5Cb	B 564	NO4400								
	67Ni–30Cu–S	B 164	NO4405					B 164	NO4405		
3.5	72Ni–15Cr–8Fe	B 564	N06600			B 168	N06600	B 166	NO6600	B 167	N06600
										B 163	N06600
3.6	33Ni–42Fe–21Cr	B 564	NO8800			B 409	N08800	B 408	N08800	B 163	N08800
3.7	65Ni–28Mo–2Fe	B 462	N10665			B 333	N10665	B 335	N10665	B 622	N10665
		B 564	N10665								
	64Ni–29.5Mo–2Cr–2Fe–Mn–W	B 462	N10675			B 333	N10675	B 335	N10675	B 622	N10675
		B 564	N10675								
3.8	54Ni–16Mo–15Cr	B 462	N10276			B 575	N10276	B 574	N10276	B 622	N10276
		B 564	N10276								
	60Ni–22Cr–9Mo–3.5Cb	B 564	N06625			B 443	N06625	B 446	N06625		
	62Ni–28Mo–5Fe	B 335	N10001			B 333	N10001	B 335	N10001	B 622	N10001
	70Ni–16Mo–7Cr–5Fe	B 573	N10003			B 434	N10003	B 573	N10003		
	61Ni–16Mo–16Cr	B 574	NO6455			B 575	N06455	B 574	N06455	B 622	N06455
	42Ni–21.5Cr–3Mo–2.3Cu	B 425	NO8825			B 424	N08825	B 425	N08825	B 423	N08825
	55Ni–21Cr–13.5Mo	B 462	NO6022			B 575	NO6022	B 574	NO6022	B 622	NO6022
		B 564	N06022								
	55Ni–23Cr–16Mo–1.6Cu	B 462	NO6200			B 575	N06200	B 574	N06200	B 622	N06200
		B 564	N06200								
3.9	47Ni–22Cr–9Mo–18Fe	B 572	N06002			B 435	N06002	B 572	N06002	B 622	N06002
3.10	25Ni–47Fe–21Cr–5Mo	B 672	N08700			B 599	N08700	B 672	N08700		

Table 1 Material Specification List: Applicable ASTM Specification (Cont'd)

GROUP 3 MATERIALS (CONT'D)

Material Group No.	Nominal Designation	Forgings		Castings		Plates		Bars		Tubular	
		Spec. No.	Grade	Spec. No.	Grade	Spec. No.	Grade	Spec. No.	Grade	Spec. No.	Grade
3.11	44Fe–25Ni–21Cr–Mo	B 649	N08904			B 625	N08904	B 649	N08904	B 677	N08904
3.12	26Ni–43Fe–22Cr–5Mo	B 621	N08320			B 620	N08320	B 621	N08320	B 622	N08320
	47Ni–22Cr–20Fe–7Mo	B 581	N06985			B 582	N06985	B 581	N06985	B 622	N06985
	46Fe–24Ni–21Cr–6Mo–Cu–N	B 462	N08367	A 351	CN3MN	B 688	N08367				
3.13	49Ni–25Cr–18Fe–6Mo	B 581	N06975			B 582	N06975	B 581	N06975	B 622	N06975
	Ni–Fe–Cr–Mo–Cu–Low C	B 564	N08031			B 625	N08031	B 649	N08031	B 622	N08031
3.14	47Ni–22Cr–19Fe–6Mo	B 581	N06007			B 582	N06007	B 581	N06007	B 622	N06007
	40Ni–29Cr–15Fe–5Mo	B 462	N06030			B 582	N06030	B 581	N06030	B 622	N06030
3.15	33Ni–2Fe–21Cr	B 564	N08810			B 409	N08810	B 408	N08810	B 407	N08810
	Ni–Mo			A 494	N–12MV						
	Ni–Mo–Cr			A 494	CW–12MW						
3.16	35Ni–19Cr–$1\frac{1}{4}$Si	B 511	N08330			B 536	N08330	B 511	N08330	B 535	N08330
3.17	29Ni–$20\frac{1}{2}$Cr–$3\frac{1}{2}$Cu–$2\frac{1}{2}$Mo			A 351	CN7M						
3.18	72Ni–15Cr–8Fe	B 167	N06600								

GROUP 4 MATERIALS

Bolting Materials [Note (1)]					
Specification Number	Grade	Notes	Specification Number	Grade	Notes
A 193		(2)(3)	B 164		(10)(11)(12)
A 307B		(4)(5)	B 166		(10)(11)
A 320		(2)(3)(6)	B 335	N10665	(10)
A 354			B 335	N10675	(10)
A 449		(7)(8)	B 408		(10)(11)(12)
A 453	651 and 660	(9)	B 473		(10)
A 540			B 574	N10276	(10)
A 564	630	(7)	B 574	N06022	(10)
			B 637	N07718	(10)

GENERAL NOTES:

(a) The user is responsible for assuring that bolting material is not used beyond limits specified in governing codes or regulations.

(b) ASME Boiler and Pressure Vessel Code Section II materials that also meet the requirements of the listed ASTM specification may also be used.

(c) Material limitations, restrictions, and special requirements are shown on the pressure-temperature tables, Table 2.

NOTES FOR GROUP 4 MATERIALS

(1) Repair welding of bolting material is not permitted.

(2) Where austenitic bolting materials have been carbide solution treated but not strain hardened, they are designated Class 1 or Class 1A in ASTM A 193. ASTM A 194 nuts of corresponding material are recommended.

(3) Where austenitic bolting materials have been carbide solution treated and strain hardened, they are designated Class 2, 2B, or 2C in ASTM A 193. ASTM A 194 nuts of corresponding material are recommended.

(4) For limitations of usage and strength level, see para. 5.1.2.

(5) Bolts with drilled or undersize heads shall not be used.

(6) For ferritic bolting materials intended for service at low temperature, ASTM A 194 Grade 7 nuts are recommended.

(7) Acceptable nuts for use with quenched and tempered steel bolts are ASTM A 194 Grade 2 and 2H.

(8) Mechanical property requirements for studs shall be the same as for bolts.

(9) Bolting materials suitable for high-temperature service with austenitic stainless steel valve materials.

(10) Nuts may be of the same material or may be of compatible grade of ASTM A 194.

(11) Forging quality not permitted unless the producer last heating or working these parts tests them as required for other permitted conditions in the same specification and certifies their final tensile, yield, and elongation properties to equal or exceed the requirements for one of the other permitted conditions.

(12) Maximum operating temperature is arbitrarily set at 260°C (500°F), unless material has been annealed, solution annealed, or hot finished, because hard temper adversely affects design stress in the creep-rupture temper range.

PRESSURE-TEMPERATURE RATINGS

For definition of Standard and Special Classes, see paras. 2.1.1 and 2.1.2. Table 2 follows on pgs. 27 – 90.

NOTE: All pressures are given as gage pressure.

Table 2-1.1 Ratings for Group 1.1 Materials

A 105 (1)(2)	A 515 Gr.70 (1)	A 696 Gr. C	A 672 Gr. B70 (1)
A 216 GR. WCB (1)	A 516 Gr. 70 (1)(3)	A 350 Gr. LF6 Cl. 1 (4)	A 672 Gr. C70 (1)
A 350 Gr. LF2 (1)	A 537 Cl. 1 (5)	A 350 Gr. LF3 (6)	

NOTES:
(1) Upon prolonged exposure to temperatures above 425C°, the carbide phase of steel may be converted to graphite. Permissible, but not recommended for prolonged usage above 425°C.
(2) Only killed steel shall be used above 455°C.
(3) Not to be used over 455°C.
(4) Not to be used over 260°C.
(5) Not to be used over 370°C.
(6) Not to be used over 345°C.

A – Standard Class

Temperature, °C	Working Pressures by Class, bar						
	150	300	600	900	1500	2500	4500
−29 to 38	19.6	51.1	102.1	153.2	255.3	425.5	765.9
50	19.2	50.1	100.2	150.4	250.6	417.7	751.9
100	17.7	46.6	93.2	139.8	233.0	388.3	699.0
150	15.8	45.1	90.2	135.2	225.4	375.6	676.1
200	13.8	43.8	87.6	131.4	219.0	365.0	657.0
250	12.1	41.9	83.9	125.8	209.7	349.5	629.1
300	10.2	39.8	79.6	119.5	199.1	331.8	597.3
325	9.3	38.7	77.4	116.1	193.6	322.6	580.7
350	8.4	37.6	75.1	112.7	187.8	313.0	563.5
375	7.4	36.4	72.7	109.1	181.8	303.1	545.5
400	6.5	34.7	69.4	104.2	173.6	289.3	520.8
425	5.5	28.8	57.5	86.3	143.8	239.7	431.5
450	4.6	23.0	46.0	69.0	115.0	191.7	345.1
475	3.7	17.4	34.9	52.3	87.2	145.3	261.5
500	2.8	11.8	23.5	35.3	58.8	97.9	176.3
538	1.4	5.9	11.8	17.7	29.5	49.2	88.6

B – Special Class

Temperature, °C	Working Pressures by Class, bar						
	150	300	600	900	1500	2500	4500
−29 to 38	19.8	51.7	103.4	155.1	258.6	430.9	775.7
50	19.8	51.7	103.4	155.1	258.6	430.9	775.7
100	19.8	51.6	103.3	154.9	258.2	430.3	774.5
150	19.6	51.0	102.1	153.1	255.2	425.3	765.5
200	19.4	50.6	101.1	151.7	252.9	421.4	758.6
250	19.4	50.5	101.1	151.6	252.6	421.1	757.9
300	19.4	50.5	101.1	151.6	252.6	421.1	757.9
325	19.2	50.1	100.2	150.3	250.6	417.6	751.7
350	18.7	48.9	97.8	146.7	244.6	407.6	733.7
375	18.1	47.1	94.2	141.3	235.5	392.5	706.5
400	16.6	43.4	86.8	130.2	217.0	361.7	651.0
425	13.8	36.0	71.9	107.9	179.8	299.6	539.3
450	11.0	28.8	57.5	86.3	143.8	239.6	431.4
475	8.4	21.8	43.6	65.4	109.0	181.6	326.9
500	5.6	14.7	29.4	44.1	73.5	122.4	220.4
538	2.8	7.4	14.8	22.2	36.9	61.6	110.8

Table 2-1.2 Ratings for Group 1.2 Materials

A 106 Gr. C (1)	A 203 Gr. B (2)	A 350 Gr. LF6 Cl. 2 (3)	A 352 Gr. LC3 (4)
A 203 Gr. B (2)	A 216 Gr. WCC (2)	A 352 Gr. LC2 (4)	A 352 Gr. LCC (4)

NOTES:

(1) Not to be used over 425°C.

(2) Upon prolonged exposure to temperatures above 455°C, the carbide phase of steel may be converted to graphite. Permissible, but not recommended for prolonged usage above 425°C.

(3) Not to be used over 260°C.

(4) Not to be used over 345°C.

A – Standard Class

Temperature, °C	Working Pressures by Class, bar						
	150	300	600	900	1500	2500	4500
−29 to 38	19.8	51.7	103.4	155.1	258.6	430.9	775.7
50	19.5	51.7	103.4	155.1	258.6	430.9	775.7
100	17.7	51.5	103.0	154.6	257.6	429.4	773.0
150	15.8	50.2	100.3	150.5	250.8	418.1	752.6
200	13.8	48.6	97.2	145.8	243.2	405.4	729.7
250	12.1	46.3	92.7	139.0	231.8	386.2	694.8
300	10.2	42.9	85.7	128.6	214.4	357.1	642.6
325	9.3	41.4	82.6	124.0	206.6	344.3	619.6
350	8.4	40.0	80.0	120.1	200.1	333.5	600.3
375	7.4	37.8	75.7	113.5	189.2	315.3	567.5
400	6.5	34.7	69.4	104.2	173.6	289.3	520.8
425	5.5	28.8	57.5	86.3	143.8	239.7	431.5
450	4.6	23.0	46.0	69.0	115.0	191.7	345.1
475	3.7	17.1	34.2	51.3	85.4	142.4	256.3
500	2.8	11.6	23.2	34.7	57.9	96.5	173.7
538	1.4	5.9	11.8	17.7	29.5	49.2	88.6

B – Special Class

Temperature, °C	Working Pressures by Class, bar						
	150	300	600	900	1500	2500	4500
−29 to 38	20.0	51.7	103.4	155.1	258.6	430.9	775.7
50	20.0	51.7	103.4	155.1	258.6	430.9	775.7
100	20.0	51.7	103.4	155.1	258.6	430.9	775.7
150	20.0	51.7	103.4	155.1	258.6	430.9	775.7
200	20.0	51.7	103.4	155.1	258.6	430.9	775.7
250	20.0	51.7	103.4	155.1	258.6	430.9	775.7
300	20.0	51.7	103.4	155.1	258.6	430.9	775.7
325	20.0	51.7	103.4	155.1	258.6	430.9	775.7
350	19.8	51.1	102.2	153.3	255.5	425.8	766.4
375	19.3	48.4	96.7	145.1	241.9	403.1	725.6
400	19.3	43.4	86.8	130.2	217.0	361.7	651.0
425	18.0	36.0	71.9	107.9	179.8	299.6	539.3
450	14.4	28.8	57.5	86.3	143.8	239.6	431.4
475	10.7	21.4	42.7	64.1	106.8	178.0	320.4
500	7.2	14.5	29.0	43.4	72.4	120.7	217.2
538	3.7	7.4	14.8	22.2	36.9	61.6	110.8

Table 2-1.3 Ratings for Group 1.3 Materials

A 203 Gr. A (1)	A 352 Gr. LCB (4)	A 516 Gr. 65 (1)(5)	A 672 Gr. B65 (1)
A 203 Gr. D (1)	A 352 Gr. LC1 (4)	A 675 Gr. 70 (1)(6)(7)	A 672 Gr. C65 (1)
A 217 Gr. WC1 (2)(3)	A 515 Gr. 65 (1)		

NOTES:

(1) Upon prolonged exposure to temperatures above 425°C, the carbide phase of steel may be converted to graphite. Permissible, but not recommended for prolonged usage above 425°C.

(2) Upon prolonged exposure to temperatures above 470°C, the carbide phase of steel of carbon-molybdenum steel may be converted to graphite. Permissible, but not recommended for prolonged usage above 470°C.

(3) Use normalized and tempered material only.

(4) Not to be used over 345°C.

(5) Not to be used over 455°C.

(6) Leaded grades shall not be used where welded or in any application above 260°C.

(7) For service temperatures above 455°C, it is recommended that killed steels containing not less than 0.10% residual silicon be used.

A – Standard Class

Temperature, °C	Working Pressures by Class, bar						
	150	300	600	900	1500	2500	4500
−29 to 38	18.4	48.0	96.0	144.1	240.1	400.1	720.3
50	18.2	47.5	94.9	142.4	237.3	395.6	712.0
100	17.4	45.3	90.7	136.0	226.7	377.8	680.1
150	15.8	43.9	87.9	131.8	219.7	366.1	659.1
200	13.8	42.5	85.1	127.6	212.7	354.4	638.0
250	12.1	40.8	81.6	122.3	203.9	339.8	611.7
300	10.2	38.7	77.4	116.1	193.4	322.4	580.3
325	9.3	37.6	75.2	112.7	187.9	313.1	563.7
350	8.4	36.4	72.8	109.2	182.0	303.3	545.9
375	7.4	35.0	69.9	104.9	174.9	291.4	524.6
400	6.5	32.6	65.2	97.9	163.1	271.9	489.3
425	5.5	27.3	54.6	81.9	136.5	227.5	409.5
450	4.6	21.6	43.2	64.8	107.9	179.9	323.8
475	3.7	15.7	31.3	47.0	78.3	130.6	235.0
500	2.8	11.1	22.1	33.2	55.4	92.3	166.1
538	1.4	5.9	11.8	17.7	29.5	49.2	88.6

B – Special Class

Temperature, °C	Working Pressures by Class, bar						
	150	300	600	900	1500	2500	4500
−29 to 38	20.0	48.0	96.0	144.1	240.1	400.1	720.3
50	20.0	48.0	96.0	144.1	240.1	400.1	720.3
100	20.0	48.0	96.0	144.1	240.1	400.1	720.3
150	20.0	48.0	96.0	144.1	240.1	400.1	720.3
200	20.0	48.0	96.0	144.1	240.1	400.1	720.3
250	20.0	48.0	96.0	144.1	240.1	400.1	720.3
300	20.0	48.0	96.0	144.1	240.1	400.1	720.3
325	20.0	48.0	95.9	143.9	239.8	399.6	719.3
350	19.8	47.3	94.6	141.9	236.5	394.1	709.4
375	19.3	44.9	89.9	134.8	224.7	374.6	674.2
400	19.3	40.8	81.6	122.3	203.9	339.8	611.7
425	17.1	34.1	68.3	102.4	170.6	284.4	511.9
450	13.5	27.0	54.0	81.0	134.9	224.9	404.8
475	9.8	19.6	39.2	58.8	97.9	163.2	293.8
500	6.9	13.8	27.7	41.5	69.2	115.3	207.6
538	3.7	7.4	14.8	22.2	36.9	61.6	110.8

Table 2-1.4 Ratings for Group 1.4 Materials

A 106 Gr. B (1)	A 515 Gr. 60 (1)(2)	A 675 Gr. 60 (1)(2)(3)	A 672 Gr. B60 (1)
A 350 Gr. LF1 (1)	A 516 Gr. 60 (1)(2)	A 675 Gr. 65 (1)(3)(4)	A 672 Gr. C60 (1)
		A 696 Gr. B	

NOTES:

(1) Upon prolonged exposure to temperatures above 425°C, the carbide phase of steel may be converted to graphite. Permissible, but not recommended for prolonged usage above 425°C.

(2) Not to be used over 455°C.

(3) Leaded grades shall not be used where welded or in any application above 260°C.

(4) For service temperatures above 455°C, it is recommended that killed steels containing not less than 0.10% residual silicon be used.

A – Standard Class

Temperature, °C	Working Pressures by Class, bar						
	150	300	600	900	1500	2500	4500
−29 to 38	16.3	42.6	85.1	127.7	212.8	354.6	638.3
50	16.0	41.8	83.5	125.3	208.9	348.1	626.6
100	14.9	38.8	77.7	116.5	194.2	323.6	582.5
150	14.4	37.6	75.1	112.7	187.8	313.0	563.4
200	13.8	36.4	72.8	109.2	182.1	303.4	546.2
250	12.1	34.9	69.8	104.7	174.6	291.0	523.7
300	10.2	33.2	66.4	99.5	165.9	276.5	497.7
325	9.3	32.2	64.5	96.7	161.2	268.6	483.5
350	8.4	31.2	62.5	93.7	156.2	260.4	468.7
375	7.4	30.4	60.7	91.1	151.8	253.0	455.3
400	6.5	29.3	58.7	88.0	146.7	244.5	440.1
425	5.5	25.8	51.5	77.3	128.8	214.7	386.5
450	4.6	21.4	42.7	64.1	106.8	178.0	320.4
475	3.7	14.1	28.2	42.3	70.5	117.4	211.4
500	2.8	10.3	20.6	30.9	51.5	85.9	154.6
538	1.4	5.9	11.8	17.7	29.5	49.2	88.6

B – Special Class

Temperature, °C	Working Pressures by Class, bar						
	150	300	600	900	1500	2500	4500
−29 to 38	17.0	44.3	88.6	133.0	221.6	369.4	664.9
50	17.0	44.3	88.6	133.0	221.6	369.4	664.9
100	17.0	44.3	88.6	133.0	221.6	369.4	664.9
150	17.0	44.3	88.6	133.0	221.6	369.4	664.9
200	17.0	44.3	88.6	133.0	221.6	369.4	664.9
250	17.0	44.3	88.6	133.0	221.6	369.4	664.9
300	16.5	43.0	86.0	129.0	215.0	358.3	644.9
325	16.1	42.0	83.9	125.9	209.9	349.8	629.6
350	15.6	40.7	81.4	122.1	203.4	339.1	610.3
375	15.2	39.5	79.1	118.6	197.6	329.4	592.9
400	14.6	38.2	76.3	114.5	190.8	317.9	572.3
425	12.4	32.3	64.6	96.9	161.5	269.2	484.5
450	10.2	26.7	53.4	80.1	133.5	222.5	400.5
475	6.8	17.6	35.2	52.9	88.1	146.8	264.3
500	4.9	12.9	25.8	38.7	64.4	107.4	193.3
538	2.8	7.4	14.8	22.2	36.9	61.6	110.8

Table 2-1.5 Ratings for Group 1.5 Materials

A 182 Gr. F1 (1)	A 204 Gr. B (1)	A 691 Gr. CM-70 (1)
A 204 Gr. A (1)		

NOTE:

(1) Upon prolonged exposure to temperatures above 470°C, the carbide phase of steel of carbon-molybdenum steel may be converted to graphite. Permissible, but not recommended for prolonged usage above 470°C.

A – Standard Class

Temperature, °C	Working Pressures by Class, bar						
	150	300	600	900	1500	2500	4500
−29 to 38	18.4	48.0	96.0	144.1	240.1	400.1	720.3
50	18.4	48.0	96.0	144.1	240.1	400.1	720.3
100	17.7	47.9	95.9	143.8	239.7	399.5	719.1
150	15.8	47.3	94.7	142.0	236.7	394.5	710.1
200	13.8	45.8	91.6	137.4	229.0	381.7	687.1
250	12.1	44.5	89.0	133.5	222.5	370.9	667.6
300	10.2	42.9	85.7	128.6	214.4	357.1	642.6
325	9.3	41.4	82.6	124.0	206.6	344.3	619.6
350	8.4	40.3	80.4	120.7	201.1	335.3	603.3
375	7.4	38.9	77.6	116.5	194.1	323.2	581.8
400	6.5	36.5	73.3	109.8	183.1	304.9	548.5
425	5.5	35.2	70.0	105.1	175.1	291.6	524.7
450	4.6	33.7	67.7	101.4	169.0	281.8	507.0
475	3.7	31.7	63.4	95.1	158.2	263.9	474.8
500	2.8	24.1	48.1	72.2	120.3	200.5	361.0
538	1.4	11.3	22.7	34.0	56.7	94.6	170.2

B – Special Class

Temperature, °C	Working Pressures by Class, bar						
	150	300	600	900	1500	2500	4500
−29 to 38	18.4	48.0	96.0	144.1	240.1	400.1	720.3
50	18.4	48.0	96.0	144.1	240.1	400.1	720.3
100	18.4	48.0	96.0	144.1	240.1	400.1	720.3
150	18.4	48.0	96.0	144.1	240.1	400.1	720.3
200	18.4	48.0	96.0	144.1	240.1	400.1	720.3
250	18.4	48.0	96.0	144.1	240.1	400.1	720.3
300	18.4	48.0	96.0	144.1	240.1	400.1	720.3
325	18.4	48.0	96.0	144.1	240.1	400.1	720.3
350	18.4	48.0	96.0	144.1	240.1	400.1	720.3
375	18.4	48.0	96.0	144.1	240.1	400.1	720.3
400	18.4	48.0	96.0	144.1	240.1	400.1	720.3
425	18.4	48.0	96.0	144.1	240.1	400.1	720.3
450	18.1	47.3	94.4	141.4	235.8	393.1	707.6
475	16.4	42.8	85.5	128.2	213.7	356.3	641.3
500	11.5	30.1	60.2	90.2	150.4	250.7	451.2
538	5.4	14.2	28.4	42.6	70.9	118.2	212.8

Table 2-1.6 Ratings for Group 1.6 Materials

A 387 Gr. 2 Cl. 1 A 387 Gr. 2 Cl. 2 A 691 Gr. $\frac{1}{2}$ Cr

A – Standard Class

Temperature, °C	Working Pressures by Class, bar						
	150	300	600	900	1500	2500	4500
−29 to 38	15.6	40.6	81.3	121.9	203.1	338.6	609.4
50	15.6	40.6	81.3	121.9	203.1	338.6	609.4
100	15.6	40.6	81.3	121.9	203.1	338.6	609.4
150	15.6	40.6	81.3	121.9	203.1	338.6	609.4
200	13.8	40.6	81.3	121.9	203.1	338.6	609.4
250	12.1	39.8	79.5	119.3	198.8	331.4	596.4
300	10.2	38.7	77.3	116.0	193.3	322.1	579.8
325	9.3	38.1	76.1	114.2	190.3	317.1	570.8
350	8.4	37.4	74.8	112.2	187.1	311.8	561.2
375	7.4	36.8	73.5	110.3	183.8	306.3	551.4
400	6.5	36.0	72.0	108.0	179.9	299.9	539.8
425	5.5	35.1	70.0	105.1	175.1	291.6	524.7
450	4.6	33.7	67.7	101.4	169.0	281.8	507.0
475	3.7	31.7	63.4	95.1	158.2	263.9	474.8
500	2.8	25.7	51.3	77.0	128.3	213.9	384.9
538	1.4	13.9	27.9	41.8	69.7	116.2	209.2

B – Special Class

Temperature, °C	Working Pressures by Class, bar						
	150	300	600	900	1500	2500	4500
−29 to 38	. . .	40.6	81.3	121.9	203.1	338.6	609.4
50	15.6	40.6	81.3	121.9	203.1	338.6	609.4
100	15.6	40.6	81.3	121.9	203.1	338.6	609.4
150	15.6	40.6	81.3	121.9	203.1	338.6	609.4
200	15.6	40.6	81.3	121.9	203.1	338.6	609.4
250	15.6	40.6	81.3	121.9	203.1	338.6	609.4
300	15.6	40.6	81.3	121.9	203.1	338.6	609.4
325	15.6	40.6	81.3	121.9	203.1	338.6	609.4
350	15.6	40.6	81.3	121.9	203.1	338.6	609.4
375	15.6	40.6	81.3	121.9	203.1	338.6	609.4
400	15.6	40.6	81.3	121.9	203.1	338.6	609.4
425	15.6	40.6	81.3	121.9	203.1	338.6	609.4
450	15.6	40.6	81.3	121.9	203.1	338.6	609.4
475	16.0	41.8	83.7	125.5	209.2	348.6	627.5
500	12.5	32.6	65.2	97.8	163.1	271.8	489.2
538	6.7	17.4	34.9	52.3	87.2	145.3	261.5

Table 2-1.7 Ratings for Group 1.7 Materials

A 691 Gr. CM 75	A 182 Gr. F2 (1)	A 217 Gr. WC4 (1)(2)	A 217 Gr. WC5 (2)

NOTES:
(1) Not to be used over 538°C.
(2) Use normalized and tempered material only.

A – Standard Class

Temperature, °C	Working Pressures by Class, bar						
	150	300	600	900	1500	2500	4500
−29 to 38	19.8	51.7	103.4	155.1	258.6	430.9	775.7
50	19.5	51.7	103.4	155.1	258.6	430.9	775.7
100	17.7	51.5	103.0	154.6	257.6	429.4	773.0
150	15.8	50.3	100.3	150.6	250.8	418.2	752.8
200	13.8	48.6	97.2	145.8	243.4	405.4	729.8
250	12.1	46.3	92.7	139.0	231.8	386.2	694.8
300	10.2	42.9	85.7	128.6	214.4	357.1	642.6
325	9.3	41.4	82.6	124.0	206.6	344.3	619.6
350	8.4	40.3	80.4	120.7	201.1	335.3	603.3
375	7.4	38.9	77.6	116.5	194.1	323.2	581.8
400	6.5	36.5	73.3	109.8	183.1	304.9	548.5
425	5.5	35.2	70.0	105.1	175.1	291.6	524.7
450	4.6	33.7	67.7	101.4	169.0	281.8	507.0
475	3.7	31.7	63.4	95.1	158.2	263.9	474.8
500	2.8	26.7	53.4	80.1	133.4	222.4	400.3
538	1.4	13.9	27.9	41.8	69.7	116.2	209.2
550	1.4(a)	12.6	25.2	37.8	63.0	105.0	188.9
575	1.4(a)	7.2	14.4	21.5	35.9	59.8	107.7

GENERAL NOTE:
(a) Flanged end valve ratings terminate at 538°C.

B – Special Class

Temperature, °C	Working Pressures by Class, bar						
	150	300	600	900	1500	2500	4500
−29 to 38	19.8	51.7	103.4	155.1	258.6	430.9	775.7
50	19.8	51.7	103.4	155.1	258.6	430.9	775.7
100	19.8	51.7	103.4	155.1	258.6	430.9	775.7
150	19.8	51.7	103.4	155.1	258.6	430.9	775.7
200	19.8	51.7	103.4	155.1	258.6	430.9	775.7
250	19.8	51.7	103.4	155.1	258.6	430.9	775.7
300	19.8	51.7	103.4	155.1	258.6	430.9	775.7
325	19.8	51.7	103.4	155.1	258.6	430.9	775.7
350	19.8	51.5	102.8	154.3	257.1	428.6	771.4
375	19.3	50.6	101.0	151.5	252.5	420.9	757.4
400	19.3	50.3	100.6	150.6	251.2	418.3	753.2
425	19.0	49.6	99.3	148.9	248.2	413.7	744.6
450	18.1	47.3	94.4	141.4	235.8	393.1	707.6
475	16.4	42.8	85.5	128.2	213.7	356.3	641.3
500	12.8	33.4	66.7	100.1	166.8	278.0	500.3
538	6.7	17.4	34.9	52.3	87.2	145.3	261.5
550	6.0	15.7	31.5	47.2	78.7	131.2	236.2
575	3.4	9.0	17.9	26.9	44.9	74.8	134.6

Table 2-1.8 Ratings for Group 1.8 Materials

A335 Gr. P22 (1)	A387 Gr. 11 Cl. 1 (1)	A387 Gr. 12 Cl. 2(1)	A691 Gr. $1\frac{1}{4}$Cr (1)
A 369 Gr. FP 22 (1)	A387 Gr. 22 Cl. 1 (1)	A691 Gr. $2\frac{1}{4}$Cr (1)	

NOTE:
(1) Permissible, but not recommended for prolonged use above 595°C.

A – Standard Class

Temperature, °C	Working Pressures by Class, bar						
	150	300	600	900	1500	2500	4500
−29 to 38	16.3	42.6	85.1	127.7	212.8	354.6	638.3
50	16.1	41.9	83.9	125.8	209.6	349.4	628.9
100	15.2	39.6	79.2	118.7	197.9	329.8	593.7
150	14.8	38.6	77.1	115.7	192.9	321.4	578.6
200	13.8	38.2	76.4	114.6	190.9	318.2	572.8
250	12.1	38.2	76.3	114.5	190.8	317.9	572.3
300	10.2	38.2	76.3	114.5	190.8	317.9	572.3
325	9.3	38.2	76.3	114.5	190.8	317.9	572.3
350	8.4	38.0	76.0	114.0	189.9	316.5	569.8
375	7.4	37.3	74.7	112.0	186.7	311.2	560.2
400	6.5	36.5	73.3	109.8	183.1	304.9	548.5
425	5.5	35.2	70.0	105.1	175.1	291.6	524.7
450	4.6	33.7	67.7	101.4	169.0	281.8	507.0
475	3.7	31.7	63.4	95.1	158.2	263.9	474.8
500	2.8	25.6	51.3	76.9	128.2	213.7	384.7
538	1.4	14.9	29.8	44.7	74.5	124.1	223.4
550	1.4(a)	12.7	25.4	38.1	63.5	105.9	190.6
575	1.4(a)	8.8	17.6	26.4	44.0	73.4	132.0
600	1.4(a)	6.1	12.1	18.2	30.3	50.4	90.8
625	1.4(a)	4.0	8.0	12.1	20.1	33.5	60.4
650	1.0(a)	2.6	5.2	7.8	13.0	21.7	39.0

GENERAL NOTE:
(a) Flanged end valve ratings terminate at 538°C.

B – Special Class

Temperature, °C	Working Pressures by Class, bar						
	150	300	600	900	1500	2500	4500
−29 to 38	17.0	44.3	88.6	133.0	221.6	369.4	664.9
50	17.0	44.3	88.6	132.9	221.5	369.2	664.6
100	16.9	44.1	88.2	132.3	220.5	367.5	661.5
150	16.5	43.0	86.0	129.0	215.0	358.3	644.9
200	16.5	43.0	86.0	129.0	215.0	358.3	644.9
250	16.5	43.0	86.0	129.0	215.0	358.3	644.9
300	16.5	43.0	86.0	129.0	215.0	358.3	644.9
325	16.5	43.0	86.0	129.0	215.0	358.3	644.9
350	16.5	43.0	86.0	129.0	215.0	358.3	644.9
375	16.7	43.7	87.3	131.0	218.4	363.9	655.1
400	18.3	47.8	95.6	143.3	238.9	398.2	716.7
425	17.9	46.6	93.2	139.9	233.1	388.5	699.3
450	17.4	45.5	90.9	136.4	227.3	378.8	681.8
475	15.9	41.5	83.0	124.5	207.5	345.9	622.5
500	12.3	32.1	64.1	96.2	160.3	267.1	480.8
538	7.1	18.6	37.2	55.8	93.1	155.1	279.2
550	6.1	15.9	31.8	47.7	79.4	132.4	238.3
575	4.2	11.0	22.0	33.0	55.0	91.7	165.1
600	2.9	7.6	15.1	22.7	37.8	63.0	113.5
625	1.9	5.0	10.1	15.1	25.1	41.9	75.4
650	1.2	3.3	6.5	9.8	16.3	27.1	48.8

Table 2-1.9 Ratings for Group 1.9 Materials

A 182 Gr. F11 Cl. 2 (1)(2)	A 217 Gr. WC6 (1)(3)	A 387 Gr. 11 Cl. 2 (2)	A 739 Gr. B11 (2)

NOTES:
(1) Use normalized and tempered material only.
(2) Permissible, but not recommended for prolonged use above 595°C.
(3) Not to be used over 595°C.

A – Standard Class

Temperature, °C	Working Pressures by Class, bar						
	150	300	600	900	1500	2500	4500
−29 to 38	19.8	51.7	103.4	155.1	258.6	430.9	775.7
50	19.5	51.7	103.4	155.1	258.6	430.9	775.7
100	17.7	51.5	103.0	154.4	257.4	429.0	772.2
150	15.8	49.7	99.5	149.2	248.7	414.5	746.2
200	13.8	48.0	95.9	143.9	239.8	399.6	719.4
250	12.1	46.3	92.7	139.0	231.8	386.2	694.8
300	10.2	42.9	85.7	128.6	214.4	357.1	642.6
325	9.3	41.4	82.6	124.0	206.6	344.3	619.6
350	8.4	40.3	80.4	120.7	201.1	335.3	603.3
375	7.4	38.9	77.6	116.5	194.1	323.2	581.8
400	6.5	36.5	73.3	109.8	183.1	304.9	548.5
425	5.5	35.2	70.0	105.1	175.1	291.6	524.7
450	4.6	33.7	67.7	101.4	169.0	281.8	507.0
475	3.7	31.7	63.4	95.1	158.2	263.9	474.8
500	2.8	25.7	51.5	77.2	128.6	214.4	385.9
538	1.4	14.9	29.8	44.7	74.5	124.1	223.4
550	1.4(a)	12.7	25.4	38.1	63.5	105.9	190.6
575	1.4(a)	8.8	17.6	26.4	44.0	73.4	132.0
600	1.4(a)	6.1	12.2	18.3	30.5	50.9	91.6
625	1.4(a)	4.3	8.5	12.8	21.3	35.5	63.9
650	1.1(a)	2.8	5.7	8.5	14.2	23.6	42.6

GENERAL NOTE:
(a) Flanged end valve ratings terminate at 538°C.

B – Special Class

Temperature °C	Working Pressures by Class, bar						
	150	300	600	900	1500	2500	4500
−29 to 38	19.8	51.7	103.4	155.1	258.6	430.9	775.7
50	19.8	51.7	103.4	155.1	258.6	430.9	775.7
100	19.8	51.7	103.4	155.1	258.6	430.9	775.7
150	19.8	51.7	103.4	155.1	258.6	430.9	775.7
200	19.8	51.7	103.4	155.1	258.6	430.9	775.7
250	19.8	51.7	103.4	155.1	258.6	430.9	775.7
300	19.8	51.7	103.4	155.1	258.6	430.9	775.7
325	19.8	51.7	103.4	155.1	258.6	430.9	775.7
350	19.8	51.5	102.8	154.3	257.1	428.6	771.4
375	19.3	50.6	101.0	151.5	252.5	420.9	757.4
400	19.3	50.3	100.6	150.6	251.2	418.3	753.2
425	19.0	49.6	99.3	148.9	248.2	413.7	744.6
450	18.1	47.3	94.4	141.4	235.8	393.1	707.6
475	16.4	42.8	85.5	128.2	213.7	356.3	641.3
500	12.3	32.2	64.3	96.5	160.8	268.0	482.4
538	7.1	18.6	37.2	55.8	93.1	155.1	279.2
550	6.1	15.9	31.8	47.7	79.4	132.4	238.3
575	4.2	11.0	22.0	33.0	55.0	91.7	165.1
600	2.9	7.6	15.3	22.9	38.2	63.6	114.5
625	2.0	5.3	10.6	16.0	26.6	44.4	79.9
650	1.4	3.5	7.1	10.6	17.7	29.5	53.2

Table 2-1.10 Ratings for Group 1.10 Materials

A 182 Gr. F22 Cl. 3 (1)	A 217 Gr. WC9 (2)(3)	A 387 Gr. 22 Cl. 2 (1)	A 739 Gr. B22 (2)

NOTES:
(1) Permissible, but not recommended for prolonged use above 595°C.
(2) Use normalized and tempered material only.
(3) Not to be used over 595°C.

A – Standard Class

Temperature, °C	Working Pressures by Class, bar						
	150	300	600	900	1500	2500	4500
−29 to 38	19.8	51.7	103.4	155.1	258.6	430.9	775.7
50	19.5	51.7	103.4	155.1	258.6	430.9	775.7
100	17.7	51.5	103.0	154.6	257.6	429.4	773.0
150	15.8	50.3	100.3	150.6	250.8	418.2	752.8
200	13.8	48.6	97.2	145.8	243.4	405.4	729.8
250	12.1	46.3	92.7	139.0	231.8	386.2	694.8
300	10.2	42.9	85.7	128.6	214.4	357.1	642.6
325	9.3	41.4	82.6	124.0	206.6	344.3	619.6
350	8.4	40.3	80.4	120.7	201.1	335.3	603.3
375	7.4	38.9	77.6	116.5	194.1	323.2	581.8
400	6.5	36.5	73.3	109.8	183.1	304.9	548.5
425	5.5	35.2	70.0	105.1	175.1	291.6	524.7
450	4.6	33.7	67.7	101.4	169.0	281.8	507.0
475	3.7	31.7	63.4	95.1	158.2	263.9	474.8
500	2.8	28.2	56.5	84.7	140.9	235.0	423.0
538	1.4	18.4	36.9	55.3	92.2	153.7	276.6
550	1.4(a)	15.6	31.3	46.9	78.2	130.3	234.5
575	1.4(a)	10.5	21.1	31.6	52.6	87.7	157.9
600	1.4(a)	6.9	13.8	20.7	34.4	57.4	103.3
625	1.4(a)	4.5	8.9	13.4	22.3	37.2	66.9
650	1.1(a)	2.8	5.7	8.5	14.2	23.6	42.6

GENERAL NOTE:
(a) Flanged end valve ratings terminate at 538°C.

B – Special Class

Temperature, °C	Working Pressures by Class, bar						
	150	300	600	900	1500	2500	4500
−29 to 38	19.8	51.7	103.4	155.1	258.6	430.9	775.7
50	19.8	51.7	103.4	155.1	258.6	430.9	775.7
100	19.8	51.6	103.2	154.9	258.1	430.2	774.3
150	19.5	51.0	101.9	152.9	254.8	424.6	764.3
200	19.3	50.2	100.4	150.7	251.1	418.5	753.4
250	19.2	50.0	100.0	149.9	249.9	416.5	749.7
300	19.1	49.8	99.6	149.3	248.9	414.8	746.7
325	19.0	49.6	99.2	148.8	248.0	413.3	743.9
350	18.9	49.2	98.4	147.6	246.0	410.0	738.1
375	18.7	48.8	97.5	146.3	243.8	406.3	731.3
400	18.7	48.8	97.5	146.3	243.8	406.3	731.3
425	18.7	48.8	97.5	146.3	243.8	406.3	731.3
450	18.1	47.3	94.4	141.4	235.8	393.1	707.6
475	16.4	42.8	85.5	128.2	213.7	356.3	641.3
500	13.7	35.6	71.5	107.1	178.6	297.5	535.4
538	8.8	23.0	46.1	69.1	115.2	192.1	345.7
550	7.5	19.5	39.1	58.6	97.7	162.8	293.1
575	5.0	13.2	26.3	39.5	65.8	109.7	197.4
600	3.3	8.6	17.2	25.8	43.0	71.7	129.1
625	2.1	5.6	11.2	16.7	27.9	46.5	83.7
650	1.4	3.5	7.1	10.6	17.7	29.5	53.2

Table 2-1.11 Ratings for Group 1.11 Materials

A 182 Gr. F21 (1)	A 302 Gr.B (2)	A 302 Gr.D (2)	A 537 Cl. 2 (3)
A 204 Gr. C (4)	A 302 Gr.C (2)	A 387 Gr. 21 Cl. 2 (1)	
A 302 Gr. A (2)			

NOTES:
(1) Permissible, but not recommended for prolonged use above 595°C.
(2) Upon prolonged exposure to temperatures above 470°C, the carbide phase of carbon-molybdenum steel may be converted to graphite. Permissible, but not recommended for prolonged use above 538°C.
(3) Not to be used over 370°C.
(4) Upon prolonged exposure to temperatures above 470°C, the carbide phase of steel may be converted to graphite. Permissible, but not recommended for prolonged usage above 470°C.

A – Standard Class

Temperature, °C	Working Pressures by Class, bar						
	150	300	600	900	1500	2500	4500
−29 to 38	20.0	51.7	103.4	155.1	258.6	430.9	775.7
50	19.5	51.7	103.4	155.1	258.6	430.9	775.7
100	17.7	51.5	103.0	154.6	257.6	429.4	773.0
150	15.8	50.3	100.3	150.6	250.8	418.2	752.8
200	13.8	48.6	97.2	145.8	243.4	405.4	729.8
250	12.1	46.3	92.7	139.0	231.8	386.2	694.8
300	10.2	42.9	85.7	128.6	214.4	357.1	642.6
325	9.3	41.4	82.6	124.0	206.6	344.3	619.6
350	8.4	40.3	80.4	120.7	201.1	335.3	603.3
375	7.4	38.9	77.6	116.5	194.1	323.2	581.8
400	6.5	36.5	73.3	109.8	183.1	304.9	548.5
425	5.5	35.2	70.0	105.1	175.1	291.6	524.7
450	4.6	33.7	67.7	101.4	169.0	281.8	507.0
475	3.7	31.7	63.4	95.1	158.2	263.9	474.8
500	2.8	23.6	47.1	70.7	117.8	196.3	353.3
538	1.4	11.3	22.7	34.0	56.7	94.6	170.2
550	1.4(a)	11.3	22.7	34.0	56.7	94.6	170.2
575	1.4(a)	10.1	20.1	30.2	50.3	83.8	150.9
600	1.4(a)	7.1	14.2	21.3	35.6	59.3	106.7
625	1.4(a)	5.3	10.6	15.9	26.5	44.2	79.6
650	1.2(a)	3.1	6.1	9.2	15.4	25.6	46.1

GENERAL NOTE:
(a) Flanged end valve ratings terminate at 538°C.

Table 2-1.11 Ratings for Group 1.11 Materials (Cont'd)

A 182 Gr. F21 (1)	A 302 Gr.B (2)	A 302 Gr.D (2)	A 537 Cl. 2 (3)
A 204 Gr. C (4)	A 302 Gr.C (2)	A 387 Gr. 21 Cl. 2 (1)	
A 302 Gr. A (2)			

NOTES:
(1) Permissible, but not recommended for prolonged use above 595°C.
(2) Upon prolonged exposure to temperatures above 470°C, the carbide phase of carbon-molybdenum steel may be converted to graphite. Permissible, but not recommended for prolonged use above 538°C.
(3) Not to be used over 370°C.
(4) Upon prolonged exposure to temperatures above 470°C, the carbide phase of steel may be converted to graphite. Permissible, but not recommended for prolonged usage above 470°C.

B – Special Class

Temperature, °C	Working Pressures by Class, bar						
	150	300	600	900	1500	2500	4500
−29 to 38	20.0	51.7	103.4	155.1	258.6	430.9	775.7
50	20.0	51.7	103.4	155.1	258.6	430.9	775.7
100	20.0	51.7	103.4	155.1	258.6	430.9	775.7
150	20.0	51.7	103.4	155.1	258.6	430.9	775.7
200	20.0	51.7	103.4	155.1	258.6	430.9	775.7
250	20.0	51.7	103.4	155.1	258.6	430.9	775.7
300	20.0	51.7	103.4	155.1	258.6	430.9	775.7
325	20.0	51.7	103.4	155.1	258.6	430.9	775.7
350	19.8	51.5	102.8	154.3	257.1	428.6	771.4
375	19.3	50.6	101.0	151.5	252.5	420.9	757.4
400	19.3	50.3	100.6	150.6	251.2	418.3	753.2
425	19.0	49.6	99.3	148.9	248.2	413.7	744.6
450	18.1	47.3	94.4	141.4	235.8	393.1	707.6
475	16.1	42.1	84.2	126.3	210.5	350.9	631.6
500	11.3	29.4	58.9	88.3	147.2	245.4	441.6
538	5.4	14.2	28.4	42.6	70.9	118.2	212.8
550	5.5	14.3	28.6	42.9	71.6	119.3	214.7
575	4.9	12.8	25.5	38.3	63.9	106.4	191.6
600	3.4	8.9	17.8	26.7	44.4	74.1	133.3
625	2.5	6.6	13.3	19.9	33.2	55.3	99.6
650	1.5	3.8	7.7	11.5	19.2	32.0	57.6

Table 2-1.12 Ratings for Group 1.12 Materials

A 335 Gr. P5	A 369 Gr. FP5	A 387 Gr. 5 Cl. 2	A 691 Gr. 5Cr
A 335 Gr. P5b	A 387 Gr. 5 Cl. 1		

A – Standard Class

Temperature, °C	Working Pressures by Class, bar						
	150	300	600	900	1500	2500	4500
−29 to 38	16.3	42.6	85.1	127.7	212.8	354.6	638.3
50	16.0	41.6	83.3	124.9	208.2	347.0	624.7
100	14.7	38.3	76.5	114.8	191.3	318.9	574.0
150	14.2	37.0	74.0	111.0	185.1	308.4	555.2
200	13.8	36.6	73.3	109.9	183.1	305.2	549.4
250	12.1	36.4	72.7	109.1	181.8	303.0	545.4
300	10.2	35.9	71.8	107.7	179.5	299.2	538.5
325	9.3	35.6	71.2	106.8	178.0	296.6	534.0
350	8.4	35.2	70.4	105.5	175.9	293.2	527.7
375	7.4	34.6	69.3	103.9	173.2	288.6	519.5
400	6.5	33.9	67.7	101.6	169.3	282.1	507.8
425	5.5	32.8	65.7	98.5	164.2	273.6	492.5
450	4.6	31.7	63.4	95.1	158.5	264.1	475.4
475	3.7	27.3	54.5	81.8	136.3	227.1	408.8
500	2.8	21.4	42.8	64.1	106.9	178.2	320.7
538	1.4	13.7	27.4	41.1	68.6	114.3	205.7
550	1.4(a)	12.0	24.1	36.1	60.2	100.4	180.7
575	1.4(a)	8.9	17.8	26.7	44.4	74.0	133.3
600	1.4(a)	6.2	12.5	18.7	31.2	51.9	93.5
625	1.4(a)	4.0	8.0	12.0	20.0	33.3	59.9
650	0.9(a)	2.4	4.7	7.1	11.8	19.7	35.5

GENERAL NOTE:
(a) Flanged end valve ratings terminate at 538°C.

B – Special Class

Temperature, °C	Working Pressures by Class, bar						
	150	300	600	900	1500	2500	4500
−29 to 38	17.0	44.3	88.6	133.0	221.6	369.4	664.9
50	17.0	44.3	88.6	132.9	221.5	369.2	664.6
100	16.9	44.1	88.2	132.3	220.5	367.4	661.4
150	16.5	42.9	85.8	128.7	214.6	357.6	643.7
200	16.3	42.6	85.3	127.9	213.2	355.4	639.7
250	16.3	42.5	85.0	127.5	212.5	354.2	637.5
300	16.1	42.1	84.1	126.2	210.3	350.4	630.8
325	16.0	41.7	83.3	125.0	208.3	347.2	624.9
350	15.7	41.0	82.0	123.0	205.0	341.7	615.1
375	15.5	40.3	80.7	121.0	201.7	336.1	605.0
400	15.5	40.3	80.7	121.0	201.7	336.1	605.0
425	15.5	40.3	80.7	121.0	201.7	336.1	605.0
450	15.5	40.3	80.7	121.0	201.7	336.1	605.0
475	13.2	34.3	68.6	103.0	171.6	286.0	514.8
500	10.2	26.7	53.4	80.2	133.6	222.7	400.9
538	6.6	17.1	34.3	51.4	85.7	142.8	257.1
550	5.8	15.1	30.1	45.2	75.3	125.5	225.9
575	4.3	11.1	22.2	33.3	55.5	92.5	166.6
600	3.0	7.8	15.6	23.4	38.9	64.9	116.8
625	1.9	5.0	10.0	15.0	24.9	41.6	74.8
650	1.1	3.0	5.9	8.9	14.8	24.6	44.3

Table 2-1.13 Ratings for Group 1.13 Materials

A 182 Gr. F5a	A 217 Gr. C5 (1)

NOTE:
(1) Use normalized and tempered material only.

A – Standard Class

Temperature, °C	Working Pressures by Class, bar						
	150	300	600	900	1500	2500	4500
−29 to 38	20.0	51.7	103.4	155.1	258.6	430.9	775.7
50	19.5	51.7	103.4	155.1	258.6	430.9	775.7
100	17.7	51.5	103.0	154.6	257.6	429.4	773.0
150	15.8	50.3	100.3	150.6	250.8	418.2	752.8
200	13.8	48.6	97.2	145.8	243.4	405.4	729.8
250	12.1	46.3	92.7	139.0	231.8	386.2	694.8
300	10.2	42.9	85.7	128.6	214.4	357.1	642.6
325	9.3	41.4	82.6	124.0	206.6	344.3	619.6
350	8.4	40.3	80.4	120.7	201.1	335.3	603.3
375	7.4	38.9	77.6	116.5	194.1	323.2	581.8
400	6.5	36.5	73.3	109.8	183.1	304.9	548.5
425	5.5	35.2	70.0	105.1	175.1	291.6	524.7
450	4.6	33.7	67.7	101.4	169.0	281.8	507.0
475	3.7	27.9	55.7	83.6	139.3	232.1	417.8
500	2.8	21.4	42.8	64.1	106.9	178.2	320.7
538	1.4	13.7	27.4	41.1	68.6	114.3	205.7
550	1.4(a)	12.0	24.1	36.1	60.2	100.4	180.7
575	1.4(a)	8.9	17.8	26.7	44.4	74.0	133.3
600	1.4(a)	6.2	12.5	18.7	31.2	51.9	93.5
625	1.4(a)	4.0	8.0	12.0	20.0	33.3	59.9
650	0.9(a)	2.4	4.7	7.1	11.8	19.7	35.5

GENERAL NOTE:
(a) Flanged end valve ratings terminate at 538°C.

B – Special Class

Temperature, °C	Working Pressures by Class, bar						
	150	300	600	900	1500	2500	4500
−29 to 38	20.0	51.7	103.4	155.1	258.6	430.9	775.7
50	20.0	51.7	103.4	155.1	258.6	430.9	775.7
100	20.0	51.7	103.4	155.1	258.6	430.9	775.7
150	20.0	51.7	103.4	155.1	258.6	430.9	775.7
200	20.0	51.7	103.4	155.1	258.6	430.9	775.7
250	20.0	51.7	103.4	155.1	258.6	430.9	775.7
300	20.0	51.7	103.4	155.1	258.6	430.9	775.7
325	20.0	51.7	103.4	155.1	258.6	430.9	775.7
350	19.8	51.5	102.8	154.3	257.1	428.6	771.4
375	19.3	50.6	101.0	151.5	252.5	420.9	757.4
400	19.3	50.3	100.6	150.6	251.2	418.3	753.2
425	19.0	49.6	99.3	148.9	248.2	413.7	744.6
450	18.1	45.2	90.3	135.5	225.9	376.5	677.6
475	16.4	34.8	69.6	104.5	174.1	290.2	522.3
500	13.4	26.7	53.4	80.2	133.6	222.7	400.9
538	8.6	17.1	34.3	51.4	85.7	142.8	257.1
550	7.5	15.1	30.1	45.2	75.3	125.5	225.9
575	5.6	11.1	22.2	33.3	55.5	92.5	166.6
600	3.9	7.8	15.6	23.4	38.9	64.9	116.8
625	2.5	5.0	10.0	15.0	24.9	41.6	74.8
650	1.5	3.0	5.9	8.9	14.8	24.6	44.3

Table 2-1.14 Ratings for Group 1.14 Materials

A 182 Gr. F9	A 217 Gr. C12 (1)

NOTE:
(1) Use normalized and tempered material only.

A – Standard Class

Temperature, °C	Working Pressures by Class, bar						
	150	300	600	900	1500	2500	4500
−29 to 38	20.0	51.7	103.4	155.1	258.6	430.9	775.7
50	19.5	51.7	103.4	155.1	258.6	430.9	775.7
100	17.7	51.5	103.0	154.6	257.6	429.4	773.0
150	15.8	50.3	100.3	150.6	250.8	418.2	752.8
200	13.8	48.6	97.2	145.8	243.4	405.4	729.8
250	12.1	46.3	92.7	139.0	231.8	386.2	694.8
300	10.2	42.9	85.7	128.6	214.4	357.1	642.6
325	9.3	41.4	82.6	124.0	206.6	344.3	619.6
350	8.4	40.3	80.4	120.7	201.1	335.3	603.3
375	7.4	38.9	77.6	116.5	194.1	323.2	581.8
400	6.5	36.5	73.3	109.8	183.1	304.9	548.5
425	5.5	35.2	70.0	105.1	175.1	291.6	524.7
450	4.6	33.7	67.7	101.4	169.0	281.8	507.0
475	3.7	31.7	63.4	95.1	158.2	263.9	474.8
500	2.8	28.2	56.5	84.7	140.9	235.0	423.0
538	1.4	17.5	35.0	52.5	87.5	145.8	262.4
550	1.4(a)	15.0	30.0	45.0	75.0	125.0	225.0
575	1.4(a)	10.5	20.9	31.4	52.3	87.1	156.8
600	1.4(a)	7.2	14.4	21.5	35.9	59.8	107.7
625	1.4(a)	5.0	9.9	14.9	24.8	41.4	74.5
650	1.4(a)	3.5	7.1	10.6	17.7	29.5	53.2

GENERAL NOTE:
(a) Flanged end valve ratings terminate at 538°C.

B – Special Class

Temperature, °C	Working Pressures by Class, bar						
	150	300	600	900	1500	2500	4500
−29 to 38	20.0	51.7	103.4	155.1	258.6	430.9	775.7
50	20.0	51.7	103.4	155.1	258.6	430.9	775.7
100	20.0	51.7	103.4	155.1	258.6	430.9	775.7
150	20.0	51.7	103.4	155.1	258.6	430.9	775.7
200	20.0	51.7	103.4	155.1	258.6	430.9	775.7
250	20.0	51.7	103.4	155.1	258.6	430.9	775.7
300	20.0	51.7	103.4	155.1	258.6	430.9	775.7
325	20.0	51.7	103.4	155.1	258.6	430.9	775.7
350	19.8	51.5	102.8	154.3	257.1	428.6	771.4
375	19.3	50.6	101.0	151.5	252.5	420.9	757.4
400	19.3	50.3	100.6	150.6	251.2	418.3	753.2
425	19.0	49.6	99.3	148.9	248.2	413.7	744.6
450	18.1	47.3	94.4	141.4	235.8	393.1	707.6
475	16.4	42.8	85.5	128.2	213.7	356.3	641.3
500	13.7	35.6	71.5	107.1	178.6	297.5	535.4
538	8.4	21.9	43.7	65.6	109.3	182.2	328.0
550	7.2	18.7	37.5	56.2	93.7	156.2	281.2
575	5.0	13.1	26.1	39.2	65.3	108.9	196.0
600	3.4	9.0	17.9	26.9	44.9	74.8	134.6
625	2.4	6.2	12.4	18.6	31.1	51.8	93.2
650	1.7	4.4	8.9	13.3	22.2	36.9	66.5

Table 2-1.15 Ratings for Group 1.15 Materials

A182 F91	A217 C12A	A387 91 Cl. 2	A335 P91

A – Standard Class

Temperature, °C	Working Pressures by Class, bar						
	150	300	600	900	1500	2500	4500
−29 to 38	20.0	51.7	103.4	155.1	258.6	430.9	775.7
50	19.5	51.7	103.4	155.1	258.6	430.9	775.7
100	17.7	51.5	103.0	154.6	257.6	429.4	773.0
150	15.8	50.3	100.3	150.6	250.8	418.2	752.8
200	13.8	48.6	97.2	145.8	243.4	405.4	729.8
250	12.1	46.3	92.7	139.0	231.8	386.2	694.8
300	10.2	42.9	85.7	128.6	214.4	357.1	642.6
325	9.3	41.4	82.6	124.0	206.6	344.3	619.6
350	8.4	40.3	80.4	120.7	201.1	335.3	603.3
375	7.4	38.9	77.6	116.5	194.1	323.2	581.8
400	6.5	36.5	73.3	109.8	183.1	304.9	548.5
425	5.5	35.2	70.0	105.1	175.1	291.6	524.7
450	4.6	33.7	67.7	101.4	169.0	281.8	507.0
475	3.7	31.7	63.4	95.1	158.2	263.9	474.8
500	2.8	28.2	56.5	84.7	140.9	235.0	423.0
538	1.4	25.2	50.0	75.2	125.5	208.9	375.8
550	1.4(a)	25.0	49.8	74.8	124.9	208.0	374.2
575	1.4(a)	24.0	47.9	71.8	119.7	199.5	359.1
600	1.4(a)	19.5	39.0	58.5	97.5	162.5	292.5
625	1.4(a)	14.6	29.2	43.8	73.0	121.7	219.1
650	1.4(a)	9.9	19.9	29.8	49.6	82.7	148.9

GENERAL NOTE:
(a) Flanged end valve ratings terminate at 538°C.

B – Special Class

Temperature °C	Working Pressures by Class, bar						
	150	300	600	900	1500	2500	4500
−29 to 38	20.0	51.7	103.4	155.1	258.6	430.9	775.7
50	20.0	51.7	103.4	155.1	258.6	430.9	775.7
100	20.0	51.7	103.4	155.1	258.6	430.9	775.7
150	20.0	51.7	103.4	155.1	258.6	430.9	775.7
200	20.0	51.7	103.4	155.1	258.6	430.9	775.7
250	20.0	51.7	103.4	155.1	258.6	430.9	775.7
300	20.0	51.7	103.4	155.1	258.6	430.9	775.7
325	20.0	51.7	103.4	155.1	258.6	430.9	775.7
350	19.8	51.5	102.8	154.3	257.1	428.6	771.4
375	19.3	50.6	101.0	151.5	252.5	420.9	757.4
400	19.3	50.3	100.6	150.6	251.2	418.3	753.2
425	19.0	49.6	99.3	148.9	248.2	413.7	744.6
450	18.1	47.3	94.4	141.4	235.8	393.1	707.6
475	16.4	42.8	85.5	128.2	213.7	356.3	641.3
500	13.7	35.6	71.5	107.1	178.6	297.5	535.4
538	11.0	29.0	57.9	86.9	145.1	241.7	435.1
550	11.0	29.0	57.9	86.9	145.1	241.7	435.1
575	10.9	28.6	57.1	85.7	143.0	238.3	428.8
600	9.3	24.4	48.7	73.1	121.9	203.1	365.6
625	7.0	18.3	36.5	54.8	91.3	152.1	273.8
650	4.8	12.4	24.8	37.2	62.1	103.4	186.2

Table 2-1.16 Ratings for Group 1.16 Materials

A 335 Gr. P1 (1)(2)	A 335 Gr. P12 (3)	A 369 Gr. FP11(3)	A 387 Gr. 12 Cl. 1 (3)
A 335 Gr. P11 (3)	A 369 Gr. FP1 (1)(2)	A 369 Gr. FP12 (3)	A 691 Gr. 1Cr (3)(4)

NOTES:
(1) Upon prolonged exposure to temperatures above 470°C, the carbide phase of steel may be converted to graphite. Permissible, but not recommended for prolonged usage above 470°C.
(2) Not to be used over 538°C.
(3) Permissible, but not recommended for prolonged use above 595°C.
(4) Use normalized and tempered material only.

A – Standard Class

Temperature, °C	Working Pressures by Class, bar						
	150	300	600	900	1500	2500	4500
−29 to 38	15.6	40.6	81.3	121.9	203.1	338.6	609.4
50	15.5	40.3	80.7	121.0	201.7	336.1	605.0
100	15.0	39.1	78.1	117.2	195.3	325.4	585.8
150	14.3	37.3	74.5	111.8	186.4	310.6	559.1
200	13.8	36.0	72.0	108.0	180.0	300.0	540.0
250	12.1	34.8	69.7	104.5	174.2	290.3	522.6
300	10.2	33.7	67.4	101.1	168.4	280.7	505.3
325	9.3	33.1	66.3	99.4	165.7	276.2	497.1
350	8.4	32.6	65.2	97.8	163.0	271.6	488.9
375	7.4	32.0	64.0	95.9	159.9	266.5	479.6
400	6.5	31.5	62.9	94.4	157.3	262.1	471.8
425	5.5	30.7	61.4	92.1	153.4	255.7	460.3
450	4.6	29.9	59.8	89.8	149.6	249.3	448.8
475	3.7	29.2	58.3	87.5	145.8	243.0	437.3
500	2.8	22.8	45.6	68.5	114.1	190.2	342.3
538	1.4	11.3	22.7	34.0	56.7	94.6	170.2
550	1.4(a)	10.7	21.4	32.2	53.6	89.4	160.8
575	1.4(a)	8.8	17.6	26.4	44.0	73.4	132.0
600	1.4(a)	6.1	12.1	18.2	30.3	50.4	90.8
625	1.4(a)	4.0	8.0	12.1	20.1	33.5	60.4
650	1.0(a)	2.6	5.2	7.8	13.0	21.7	39.0

GENERAL NOTE:
(a) Flanged end valve ratings terminate at 538°C.

Table 2-1.16 Ratings for Group 1.16 Materials (Cont'd)

A 335 Gr. P1 (1)(2)	A 335 Gr. P12 (3)	A 369 Gr. FP11(3)	A 387 Gr. 12 Cl. 1 (3)
A 335 Gr. P11 (2)	A 369 Gr. FP1 (1)(2)	A 369 Gr. FP12 (3)	A 691 Gr. 1Cr (3)(4)

NOTES:
(1) Upon prolonged exposure to temperatures above 470°C, the carbide phase of steel may be converted to graphite. Permissible, but not recommended for prolonged usage above 470°C.
(2) Not to be used over 538°C.
(3) Permissible, but not recommended for prolonged use above 595°C.
(4) Use normalized and tempered material only.

B – Special Class

Temperature, °C	Working Pressures by Class, bar						
	150	300	600	900	1500	2500	4500
−29 to 38	15.6	40.6	81.3	121.9	203.1	338.6	609.4
50	15.5	40.5	80.9	121.4	202.3	337.2	607.0
100	15.3	39.8	79.6	119.4	199.0	331.6	596.9
150	15.0	39.1	78.2	117.2	195.4	325.7	586.2
200	15.0	39.1	78.2	117.2	195.4	325.7	586.2
250	15.0	39.1	78.2	117.2	195.4	325.7	586.2
300	15.0	39.1	78.2	117.2	195.4	325.7	586.2
325	15.0	39.1	78.2	117.2	195.4	325.7	586.2
350	15.0	39.1	78.2	117.2	195.4	325.7	586.2
375	15.0	39.1	78.2	117.2	195.4	325.7	586.2
400	15.0	39.1	78.2	117.2	195.4	325.7	586.2
425	15.0	39.1	78.2	117.2	195.4	325.7	586.2
450	15.0	39.1	78.2	117.2	195.4	325.7	586.2
475	14.8	38.7	77.4	116.2	193.6	322.7	580.8
500	11.3	29.4	58.8	88.2	147.0	245.0	441.0
538	5.4	14.2	28.4	42.6	70.9	118.2	212.8
550	5.3	13.8	27.6	41.4	69.0	114.9	206.9
575	4.4	11.6	23.2	34.8	57.9	96.6	173.8
600	2.9	7.6	15.1	22.7	37.8	63.0	113.5
625	1.9	5.0	10.1	15.1	25.1	41.9	75.4
650	1.2	3.3	6.5	9.8	16.3	27.1	48.8

Table 2-1.17 Ratings for Group 1.17 Materials

A 182 Gr. F12 Cl. 2 (1)(2)	A 182 Gr. F5

NOTES:
(1) Use normalized and tempered material only.
(2) Permissible, but not recommended for prolonged use above 595°C.

A – Standard Class

Temperature, °C	Working Pressures by Class, bar						
	150	300	600	900	1500	2500	4500
−29 to 38	19.8	51.7	103.4	155.1	258.6	430.9	775.7
50	19.5	51.5	103.0	154.5	257.5	429.2	772.5
100	17.7	50.4	100.9	151.3	252.2	420.4	756.7
150	15.8	48.2	96.4	144.5	240.9	401.5	722.7
200	13.8	46.3	92.5	138.8	231.3	385.6	694.0
250	12.1	44.8	89.6	134.5	224.1	373.5	672.3
300	10.2	42.9	85.7	128.6	214.4	357.1	642.6
325	9.3	41.4	82.6	124.0	206.6	344.3	619.6
350	8.4	40.3	80.4	120.7	201.1	335.3	603.3
375	7.4	38.9	77.6	116.5	194.1	323.2	581.8
400	6.5	36.5	73.3	109.8	183.1	304.9	548.5
425	5.5	35.2	70.0	105.1	175.1	291.6	524.7
450	4.6	33.7	67.7	101.4	169.0	281.8	507.0
475	3.7	27.9	55.7	83.6	139.3	232.1	417.8
500	2.8	21.4	42.8	64.1	106.9	178.2	320.7
538	1.4	13.7	27.4	41.1	68.6	114.3	205.7
550	1.4(a)	12.0	24.1	36.1	60.2	100.4	180.7
575	1.4(a)	8.8	17.6	26.4	44.0	73.4	132.0
600	1.4(a)	6.1	12.1	18.2	30.3	50.4	90.8
625	1.4(a)	4.0	8.0	12.0	20.0	33.3	59.9
650	0.9(a)	2.4	4.7	7.1	11.8	19.7	35.5

GENERAL NOTE:
(a) Flanged end valve ratings terminate at 538°C.

B – Special Class

Temperature, °C	Working Pressures by Class, bar						
	150	300	600	900	1500	2500	4500
−29 to 38	19.8	51.7	103.4	155.1	258.6	430.9	775.7
50	19.7	51.5	103.0	154.5	257.5	429.2	772.5
100	19.4	50.6	101.3	151.9	253.1	421.9	759.4
150	19.1	49.7	99.4	149.1	248.6	414.3	745.7
200	19.1	49.7	99.4	149.1	248.6	414.3	745.7
250	19.0	49.6	99.2	148.8	248.0	413.3	743.9
300	18.8	49.0	98.1	147.1	245.2	408.6	735.5
325	18.6	48.6	97.2	145.7	242.9	404.8	728.7
350	18.3	47.8	95.7	143.5	239.2	398.7	717.6
375	18.0	47.1	94.1	141.2	235.3	392.1	705.9
400	18.0	47.1	94.1	141.2	235.3	392.1	705.9
425	18.0	47.1	94.1	141.2	235.3	392.1	705.9
450	16.5	43.0	86.0	129.1	215.1	358.5	645.3
475	13.3	34.8	69.6	104.5	174.1	290.2	522.3
500	10.2	26.7	53.4	80.2	133.6	222.7	400.9
538	6.6	17.1	34.3	51.4	85.7	142.8	257.1
550	5.8	15.1	30.1	45.2	75.3	125.5	225.9
575	4.2	11.0	22.0	33.0	55.0	91.7	165.1
600	2.9	7.6	15.1	22.7	37.8	63.0	113.5
625	1.9	5.0	10.0	15.0	24.9	41.6	74.8
650	1.1	3.0	5.9	8.9	14.8	24.6	44.3

Table 2-2.1 Ratings for Group 2.1 Materials

A 182 Gr. F304 (1)	A 312 Gr. TP304 (1)	A 358 Gr. 304 (1)	A 430 Gr. FP304H
A 182 Gr. F304H	A 312 Gr. TP304H	A 376 Gr. TP304 (1)	A 479 Gr. 304 (1)
A 240 Gr. 304 (1)	A 351 Gr. CF3 (2)	A 376 Gr. TP304H	A 479 Gr. 304H
A 240 Gr. 304H	A 351 Gr. CF8 (1)	A 430 Gr. FP304 (1)	

NOTES:
(1) At temperatures above 538°C, use only when the carbon content is 0.04% or higher.
(2) Not to be used over 425°C.

A – Standard Class

Temperature, °C	Working Pressures by Class, bar						
	150	300	600	900	1500	2500	4500
−29 to 38	19.0	49.6	99.3	148.9	248.2	413.7	744.6
50	18.3	47.8	95.6	143.5	239.1	398.5	717.3
100	15.7	40.9	81.7	122.6	204.3	340.4	612.8
150	14.2	37.0	74.0	111.0	185.0	308.4	555.1
200	13.2	34.5	69.0	103.4	172.4	287.3	517.2
250	12.1	32.5	65.0	97.5	162.4	270.7	487.3
300	10.2	30.9	61.8	92.7	154.6	257.6	463.7
325	9.3	30.2	60.4	90.7	151.1	251.9	453.3
350	8.4	29.6	59.3	88.9	148.1	246.9	444.4
375	7.4	29.0	58.1	87.1	145.2	241.9	435.5
400	6.5	28.4	56.9	85.3	142.2	237.0	426.6
425	5.5	28.0	56.0	84.0	140.0	233.3	419.9
450	4.6	27.4	54.8	82.2	137.0	228.4	411.1
475	3.7	26.9	53.9	80.8	134.7	224.5	404.0
500	2.8	26.5	53.0	79.5	132.4	220.7	397.3
538	1.4	24.4	48.9	73.3	122.1	203.6	366.4
550	1.4(a)	23.6	47.1	70.7	117.8	196.3	353.4
575	1.4(a)	20.8	41.7	62.5	104.2	173.7	312.7
600	1.4(a)	16.9	33.8	50.6	84.4	140.7	253.2
625	1.4(a)	13.8	27.6	41.4	68.9	114.9	206.8
650	1.4(a)	11.3	22.5	33.8	56.3	93.8	168.9
675	1.4(a)	9.3	18.7	28.0	46.7	77.9	140.2
700	1.4(a)	8.0	16.1	24.1	40.1	66.9	120.4
725	1.4(a)	6.8	13.5	20.3	33.8	56.3	101.3
750	1.4(a)	5.8	11.6	17.3	28.9	48.1	86.7
775	1.4(a)	4.6	9.0	13.7	22.8	38.0	68.4
800	1.2(a)	3.5	7.0	10.5	17.4	29.2	52.6
816	1.0(a)	2.8	5.9	8.6	14.1	23.8	42.7

GENERAL NOTE:
(a) Flanged end valve ratings terminate at 538°C.

Table 2-2.1 Ratings for Group 2.1 Materials (Cont'd)

A 182 Gr. F304 (1)	A 312 Gr. TP304 (1)	A 358 Gr. 304 (1)	A 430 Gr. FP304H
A 182 Gr. F304H	A 312 Gr. TP304H	A 376 Gr. TP304 (1)	A 479 Gr. 304 (1)
A 240 Gr. 304 (1)	A 351 Gr. CF3 (2)	A 376 Gr. TP304H	A 479 Gr. 304H
A 240 Gr. 304H	A 351 Gr. CF8 (1)	A 430 Gr. FP304 (1)	

NOTES:
(1) At temperatures above 538°C, use only when the carbon content is 0.04% or higher.
(2) Not to be used over 425°C.

B – Special Class

Temperature, °C	Working Pressures by Class, bar						
	150	300	600	900	1500	2500	4500
−29 to 38	19.8	51.7	103.4	155.1	258.6	430.9	775.7
50	19.4	50.5	101.0	151.5	252.5	420.8	757.4
100	17.5	45.6	91.2	136.8	228.0	380.0	683.9
150	15.8	41.3	82.6	123.9	206.5	344.2	619.6
200	14.8	38.5	77.0	115.4	192.4	320.7	577.2
250	13.9	36.3	72.5	108.8	181.3	302.2	543.9
300	13.2	34.5	69.0	103.5	172.5	287.5	517.5
325	12.9	33.7	67.5	101.2	168.7	281.1	506.0
350	12.7	33.1	66.1	99.2	165.3	275.5	496.0
375	12.4	32.4	64.8	97.2	162.0	270.0	486.0
400	12.2	31.7	63.5	95.2	158.7	264.5	476.1
425	12.0	31.2	62.5	93.7	156.2	260.4	468.7
450	11.7	30.6	61.2	91.8	153.0	254.9	458.9
475	11.5	30.1	60.1	90.2	150.3	250.5	450.9
500	11.3	29.6	59.1	88.7	147.8	246.4	443.5
538	11.0	28.6	57.3	85.9	143.1	238.5	429.4
550	10.9	28.4	56.8	85.1	141.9	236.5	425.7
575	10.0	26.1	52.1	78.2	130.3	217.2	390.9
600	8.1	21.1	42.2	63.3	105.5	175.8	316.5
625	6.6	17.2	34.5	51.7	86.2	143.6	258.5
650	5.4	14.1	28.2	42.2	70.4	117.3	211.2
675	4.5	11.7	23.4	35.1	58.4	97.4	175.3
700	4.1	10.7	21.3	32.0	53.3	88.9	160.0
725	3.5	9.2	18.5	27.7	46.2	77.0	138.6
750	2.8	7.4	14.8	22.1	36.7	61.2	110.3
775	2.2	5.8	11.4	17.2	28.5	47.6	85.6
800	1.8	4.4	8.8	13.2	22.0	36.6	65.6
816	1.4	3.4	7.2	10.7	17.9	29.6	53.1

Table 2-2.2 Ratings for Group 2.2 Materials

A 182 Gr. F316 (1)	A 312 Gr. TP316 (1)	A 351 Gr. CF8A (2)	A 430 Gr. FP316 (1)
A 182 Gr. F316H	A 312 Gr. TP316H	A 351 Gr. CF8M (1)	A 430 Gr. FP316H
A 182 Gr. F317 (1)	A 312 Gr. TP317 (1)	A 358 Gr. 316 (1)	A 479 Gr. 316 (1)
A 240 Gr. 316 (1)	A 351 Gr. CF3A (2)	A 376 Gr. TP316 (1)	A 479 Gr. 316H
A 240 Gr. 316H	A 351 Gr. CF3M (3)	A 376 Gr. TP316H	A 351 Gr. CG8M (4)
A 240 Gr. 317 (1)			

NOTES:
(1) At temperatures above 538°C, use only when the carbon content is 0.04% or higher.
(2) Not to be used over 345°C.
(3) Not to be used over 455°C.
(4) Not to be used over 538°C.

A – Standard Class

Temperature, °C	Working Pressures by Class, bar						
	150	300	600	900	1500	2500	4500
−29 to 38	19.0	49.6	99.3	148.9	248.2	413.7	744.6
50	18.4	48.1	96.2	144.3	240.6	400.9	721.7
100	16.2	42.2	84.4	126.6	211.0	351.6	632.9
150	14.8	38.5	77.0	115.5	192.5	320.8	577.4
200	13.7	35.7	71.3	107.0	178.3	297.2	534.9
250	12.1	33.4	66.8	100.1	166.9	278.1	500.6
300	10.2	31.6	63.2	94.9	158.1	263.5	474.3
325	9.3	30.9	61.8	92.7	154.4	257.4	463.3
350	8.4	30.3	60.7	91.0	151.6	252.7	454.9
375	7.4	29.9	59.8	89.6	149.4	249.0	448.2
400	6.5	29.4	58.9	88.3	147.2	245.3	441.6
425	5.5	29.1	58.3	87.4	145.7	242.9	437.1
450	4.6	28.8	57.7	86.5	144.2	240.4	432.7
475	3.7	28.7	57.3	86.0	143.4	238.9	430.1
500	2.8	28.2	56.5	84.7	140.9	235.0	423.0
538	1.4	25.2	50.0	75.2	125.5	208.9	375.8
550	1.4(a)	25.0	49.8	74.8	124.9	208.0	374.2
575	1.4(a)	24.0	47.9	71.8	119.7	199.5	359.1
600	1.4(a)	19.9	39.8	59.7	99.5	165.9	298.6
625	1.4(a)	15.8	31.6	47.4	79.1	131.8	237.2
650	1.4(a)	12.7	25.3	38.0	63.3	105.5	189.9
675	1.4(a)	10.3	20.6	31.0	51.6	86.0	154.8
700	1.4(a)	8.4	16.8	25.1	41.9	69.8	125.7
725	1.4(a)	7.0	14.0	21.0	34.9	58.2	104.8
750	1.4(a)	5.9	11.7	17.6	29.3	48.9	87.9
775	1.4(a)	4.6	9.0	13.7	22.8	38.0	68.4
800	1.2(a)	3.5	7.0	10.5	17.4	29.2	52.6
816	1.0(a)	2.8	5.9	8.6	14.1	23.8	42.7

GENERAL NOTE:
(a) Flanged end valve ratings terminate at 538°C.

Table 2-2.2 Ratings for Group 2.2 Materials (Cont'd)

A 182 Gr. F316 (1)	A 312 Gr. TP316 (1)	A 351 Gr. CF8A (2)	A 430 Gr. FP316 (1)
A 182 Gr. F316H	A 312 Gr. TP316H	A 351 Gr. CF8M (1)	A 430 Gr. FP316H
A 182 Gr. F317(1)	A 312 Gr. TP317 (1)	A 358 Gr. 316 (1)	A 479 Gr. 316 (1)
A 240 Gr. 316 (1)	A 351 Gr. CF3A (2)	A 376 Gr. TP316 (1)	A 479 Gr. 316H
A 240 Gr. 316H	A 351 Gr. CF3M (3)	A 376 Gr. TP316H	A 351 Gr. CG8M (4)
A 240 Gr. 317 (1)			

NOTES:
(1) At temperatures above 538°C, use only when the carbon content is 0.04% or higher.
(2) Not to be used over 345°C.
(3) Not to be used over 538°C.
(4) Not to be used over 455°C.

B – Special Class

Temperature, °C	Working Pressures by Class, bar						
	150	300	600	900	1500	2500	4500
−29 to 38	19.8	51.7	103.4	155.1	258.6	430.9	775.7
50	19.5	50.8	101.6	152.5	254.1	423.5	762.3
100	18.1	47.1	94.2	141.3	235.5	392.4	706.4
150	16.5	43.0	85.9	128.9	214.8	358.0	644.4
200	15.3	39.8	79.6	119.4	199.0	331.7	597.0
250	14.3	37.3	74.5	111.8	186.3	310.4	558.8
300	13.5	35.3	70.6	105.9	176.4	294.1	529.3
325	13.2	34.5	68.9	103.4	172.3	287.2	517.0
350	13.0	33.8	67.7	101.5	169.2	282.1	507.7
375	12.8	33.3	66.7	100.0	166.7	277.9	500.2
400	12.6	32.9	65.7	98.6	164.3	273.8	492.9
425	12.5	32.5	65.1	97.6	162.6	271.1	487.9
450	12.3	32.2	64.4	96.6	161.0	268.3	482.9
475	12.3	32.0	64.0	96.0	160.0	266.6	480.0
500	12.2	31.7	63.4	95.1	158.6	264.3	475.7
538	11.0	29.0	57.9	86.9	145.1	241.7	435.1
550	11.0	29.0	57.9	86.9	145.1	241.7	435.1
575	10.9	28.6	57.1	85.7	143.0	238.3	428.8
600	9.5	24.9	49.8	74.6	124.4	207.3	373.2
625	7.6	19.8	39.5	59.3	98.8	164.7	296.5
650	6.1	15.8	31.7	47.5	79.1	131.9	237.4
675	4.9	12.9	25.8	38.7	64.5	107.5	193.5
700	4.4	11.4	22.8	34.3	57.1	95.2	171.3
725	3.7	9.5	19.1	28.6	47.7	79.5	143.0
750	2.8	7.4	14.8	22.1	36.7	61.2	110.3
775	2.2	5.8	11.4	17.2	28.5	47.6	85.6
800	1.8	4.4	8.8	13.2	22.0	36.6	65.6
816	1.4	3.4	7.2	10.7	17.9	29.6	53.1

Table 2-2.3 Ratings for Group 2.3 Material

A 182 Gr. F304L (1)	A 240 Gr. 304L (1)	A 312 Gr. TP304L (1)	A 479 Gr. 304L (1)
A 182 Gr. F316L	A 240 Gr. 316L	A 312 Gr. TP316L	A 479 Gr. 316L

NOTE:
(1) Not to be used over 425°C.

A – Standard Class

Temperature, °C	Working Pressures by Class, bar						
	150	300	600	900	1500	2500	4500
−29 to 38	15.9	41.4	82.7	124.1	206.8	344.7	620.5
50	15.3	40.0	80.0	120.1	200.1	333.5	600.3
100	13.3	34.8	69.6	104.4	173.9	289.9	521.8
150	12.0	31.4	62.8	94.2	157.0	261.6	470.9
200	11.2	29.2	58.3	87.5	145.8	243.0	437.3
250	10.5	27.5	54.9	82.4	137.3	228.9	412.0
300	10.0	26.1	52.1	78.2	130.3	217.2	391.0
325	9.3	25.5	51.0	76.4	127.4	212.3	382.2
350	8.4	25.1	50.1	75.2	125.4	208.9	376.1
375	7.4	24.8	49.5	74.3	123.8	206.3	371.3
400	6.5	24.3	48.6	72.9	121.5	202.5	364.6
425	5.5	23.9	47.7	71.6	119.3	198.8	357.9
450	4.6	23.4	46.8	70.2	117.1	195.1	351.2

B – Special Class

Temperature, °C	Working Pressures by Class, bar						
	150	300	600	900	1500	2500	4500
−29 to 38	17.7	46.2	92.3	138.5	230.9	384.8	692.6
50	17.1	44.7	89.3	134.0	223.3	372.2	670.0
100	14.9	38.8	77.7	116.5	194.1	323.6	582.4
150	13.4	35.0	70.1	105.1	175.2	291.9	525.5
200	12.5	32.5	65.1	97.6	162.7	271.2	488.1
250	11.8	30.7	61.3	92.0	153.3	255.4	459.8
300	11.2	29.1	58.2	87.3	145.5	242.4	436.4
325	10.9	28.4	56.9	85.3	142.2	237.0	426.6
350	10.7	28.0	56.0	83.9	139.9	233.2	419.7
375	10.6	27.6	55.2	82.9	138.1	230.2	414.4
400	10.4	27.1	54.3	81.4	135.6	226.0	406.9
425	10.2	26.6	53.3	79.9	133.1	221.9	399.4
450	10.0	26.1	52.3	78.4	130.6	217.7	391.9

Table 2-2.4 Ratings for Group 2.4 Materials

A 182 Gr. F321 (1)	A 312 Gr. TP321 (1)	A 376 Gr. TP321 (1)	A 430 Gr. FP321H
A 182 Gr. F321H (2)	A 312 Gr. TP321H	A 376 Gr. TP321H	A 479 Gr. 321 (1)
A 240 Gr. 321 (1)	A 358 Gr. 321 (1)	A 430 Gr. FP321 (1)	A 479 Gr. 321H
A 240 Gr. 321H (2)			

NOTES:
(1) Not to be used over 538°C.
(2) At temperatures above 538°C, use only if the material is heat treated by heating to a minimum temperature of 1095°C.

A – Standard Class

Temperature, °C	Working Pressures by Class, bar						
	150	300	600	900	1500	2500	4500
−29 to 38	19.0	49.6	99.3	148.9	248.2	413.7	744.6
50	18.6	48.6	97.1	145.7	242.8	404.6	728.3
100	17.0	44.2	88.5	132.7	221.2	368.7	663.6
150	15.7	41.0	82.0	122.9	204.9	341.5	614.7
200	13.8	38.3	76.6	114.9	191.5	319.1	574.5
250	12.1	36.0	72.0	108.1	180.1	300.2	540.4
300	10.2	34.1	68.3	102.4	170.7	284.6	512.2
325	9.3	33.3	66.6	99.9	166.5	277.6	499.6
350	8.4	32.6	65.2	97.8	163.0	271.7	489.1
375	7.4	32.0	64.1	96.1	160.2	266.9	480.5
400	6.5	31.6	63.2	94.8	157.9	263.2	473.8
425	5.5	31.1	62.3	93.4	155.7	259.5	467.1
450	4.6	30.8	61.7	92.5	154.2	256.9	462.5
475	3.7	30.5	61.1	91.6	152.7	254.4	458.0
500	2.8	28.2	56.5	84.7	140.9	235.0	423.0
538	1.4	25.2	50.0	75.2	125.5	208.9	375.8
550	1.4(a)	25.0	49.8	74.8	124.9	208.0	374.2
575	1.4(a)	24.0	47.9	71.8	119.7	199.5	359.1
600	1.4(a)	20.3	40.5	60.8	101.3	168.9	304.0
625	1.4(a)	15.8	31.6	47.4	79.1	131.8	237.2
650	1.4(a)	12.6	25.3	37.9	63.2	105.4	189.6
675	1.4(a)	9.9	19.8	29.6	49.4	82.3	148.1
700	1.4(a)	7.9	15.8	23.7	39.5	65.9	118.6
725	1.4(a)	6.3	12.7	19.0	31.7	52.8	95.1
750	1.4(a)	5.0	10.0	15.0	25.0	41.7	75.0
775	1.4(a)	4.0	8.0	11.9	19.9	33.2	59.7
800	1.2(a)	3.1	6.3	9.4	15.6	26.1	46.9
816	1.0(a)	2.6	5.2	7.8	13.0	21.7	39.0

GENERAL NOTE:
(a) Flanged end valve ratings terminate at 538°C.

Ratings for Group 2.4 Materials (Cont'd)

A 182 Gr. F321 (1)	A 312 Gr. TP321 (1)	A 376 Gr. TP321 (1)	A 430 Gr. FP321H
A 182 Gr. F321H (2)	A 312 Gr. TP321H	A 376 Gr. TP321H	A 479 Gr. 321 (1)
A 240 Gr. 321 (1)	A 358 Gr. 321 (1)	A 430 Gr. FP321 (1)	A 479 Gr. 321H
A 240 Gr. 321H (2)			

NOTES:
(1) Not to be used over 538°C.
(2) At temperatures above 538°C, use only if the material is heat treated by heating to a minimum temperature of 1095°C.

B – Special Class

Temperature, °C	Working Pressures by Class, bar						
	150	300	600	900	1500	2500	4500
−29 to 38	19.8	51.7	103.4	155.1	258.6	430.9	775.7
50	19.6	51.1	102.3	153.4	255.6	426.0	766.9
100	18.7	48.7	97.3	146.0	243.3	405.5	729.9
150	17.5	45.7	91.5	137.2	228.7	381.1	686.0
200	16.4	42.7	85.5	128.2	213.7	356.2	641.1
250	15.4	40.2	80.4	120.6	201.0	335.0	603.1
300	14.6	38.1	76.2	114.3	190.6	317.6	571.7
325	14.3	37.2	74.4	111.5	185.9	309.8	557.6
350	13.9	36.4	72.8	109.2	181.9	303.2	545.8
375	13.7	35.8	71.5	107.3	178.8	297.9	536.3
400	13.5	35.3	70.5	105.8	176.3	293.8	528.8
425	13.3	34.8	69.5	104.3	173.8	289.6	521.3
450	13.2	34.4	68.8	103.2	172.0	286.7	516.1
475	13.1	34.1	68.2	102.2	170.4	284.0	511.2
500	12.9	33.7	67.5	101.2	168.7	281.2	506.2
538	11.0	29.0	57.9	86.9	145.1	241.7	435.1
550	11.0	29.0	57.9	86.9	145.1	241.7	435.1
575	10.9	28.6	57.1	85.7	143.0	238.3	428.8
600	9.7	25.3	50.7	76.0	126.6	211.1	379.9
625	7.6	19.8	39.5	59.3	98.8	164.7	296.5
650	6.1	15.8	31.6	47.4	79.0	131.7	237.0
675	4.7	12.3	24.7	37.0	61.7	102.9	185.2
700	4.2	10.8	21.7	32.5	54.2	90.3	162.5
725	3.4	8.9	17.7	26.6	44.3	73.8	132.9
750	2.6	6.7	13.4	20.0	33.4	55.7	100.2
775	1.9	5.0	10.0	15.0	25.1	41.8	75.2
800	1.7	4.4	8.8	13.2	22.0	36.6	65.6
816	1.2	3.3	6.5	9.8	16.3	27.1	48.8

Table 2-2.5 Ratings for Group 2.5 Materials

A 182 Gr. F347 (1)	A 240 Gr. 348 (1)	A 358 Gr. 347 (1)	A 430 Gr. FP347 (1)
A 182 Gr. F347H (2)	A 240 Gr. 348H (2)	A 376 Gr. TP347 (1)	A 430 Gr. FP347H
A 182 Gr. F348 (1)	A 312 Gr. TP347 (1)	A 376 Gr. TP347H	A 479 Gr. 347 (1)
A 182 Gr. F348H (2)	A 312 Gr. TP347H	A 376 Gr. TP348 (1)	A 479 Gr. 347H
A 240 Gr. 347 (1)	A 312 Gr. TP348 (1)	A 376 Gr. TP348H (1)	A 479 Gr. 348 (1)
A 240 Gr. 347H (2)	A 312 Gr. TP348H		A 479 Gr. 348H

NOTES:
(1) Not to be used over 538°C.
(2) At temperatures above 538°C, use only if the material is heat treated by heating to a minimum temperature of 1095°C.

A – Standard Class

Temperature, °C	Working Pressures by Class, bar						
	150	300	600	900	1500	2500	4500
−29 to 38	19.0	49.6	99.3	148.9	248.2	413.7	744.6
50	18.7	48.8	97.5	146.3	243.8	406.4	731.5
100	17.4	45.3	90.6	135.9	226.5	377.4	679.4
150	15.8	42.5	84.9	127.4	212.4	353.9	637.1
200	13.8	39.9	79.9	119.8	199.7	332.8	599.1
250	12.1	37.8	75.6	113.4	189.1	315.1	567.2
300	10.2	36.1	72.2	108.3	180.4	300.7	541.3
325	9.3	35.4	70.7	106.1	176.8	294.6	530.3
350	8.4	34.8	69.5	104.3	173.8	289.6	521.3
375	7.4	34.2	68.4	102.6	171.0	285.1	513.1
400	6.5	33.9	67.8	101.7	169.5	282.6	508.6
425	5.5	33.6	67.2	100.8	168.1	280.1	504.2
450	4.6	33.5	66.9	100.4	167.3	278.8	501.8
475	3.7	31.7	63.4	95.1	158.2	263.9	474.8
500	2.8	28.2	56.5	84.7	140.9	235.0	423.0
538	1.4	25.2	50.0	75.2	125.5	208.9	375.8
550	1.4(a)	25.0	49.8	74.8	124.9	208.0	374.2
575	1.4(a)	24.0	47.9	71.8	119.7	199.5	359.1
600	1.4(a)	21.6	42.9	64.2	107.0	178.5	321.4
625	1.4(a)	18.3	36.6	54.9	91.2	152.0	273.8
650	1.4(a)	14.1	28.1	42.5	70.7	117.7	211.7
675	1.4(a)	12.4	25.2	37.6	62.7	104.5	187.9
700	1.4(a)	10.1	20.0	29.8	49.7	83.0	149.4
725	1.4(a)	7.9	15.4	23.2	38.6	64.4	115.8
750	1.4(a)	5.9	11.7	17.6	29.6	49.1	88.2
775	1.4(a)	4.6	9.0	13.7	22.8	38.0	68.4
800	1.2(a)	3.5	7.0	10.5	17.4	29.2	52.6
816	1.0(a)	2.8	5.9	8.6	14.1	23.8	42.7

GENERAL NOTE:
(a) Flanged end valve ratings terminate at 538°C.

Table 2-2.5 Ratings for Group 2.5 Materials (Cont'd)

A 182 Gr. F347 (1)	A 240 Gr. 348 (1)	A 358 Gr. 347 (1)	A 430 Gr. FP347 (1)
A 182 Gr. F347H (2)	A 240 Gr. 348H (2)	A 376 Gr. TP347 (1)	A 430 Gr. FP347H
A 182 Gr. F348 (1)	A 312 Gr. TP347 (1)	A 376 Gr. TP347H	A 479 Gr. 347 (1)
A 182 Gr. F348H (2)	A 312 Gr. TP347H	A 376 Gr. TP348 (1)	A 479 Gr. 347H
A 240 Gr. 347 (1)	A 312 Gr. TP348 (1)	A 376 Gr. TP348H (1)	A 479 Gr. 348 (1)
A 240 Gr. 347H (2)	A 312 Gr. TP348H		A 479 Gr. 348H

NOTES:
(1) Not to be used over 538°C.
(2) At temperatures above 538°C, use only if the material is heat treated by heating to a minimum temperature of 1095°C.

B – Special Class

Temperature, °C	Working Pressures by Class, bar						
	150	300	600	900	1500	2500	4500
−29 to 38	20.0	51.7	103.4	155.1	258.6	430.9	775.7
50	20.0	51.7	103.4	155.1	258.6	430.9	775.7
100	19.4	50.6	101.1	151.7	252.8	421.3	758.3
150	18.2	47.4	94.8	142.2	237.0	395.0	711.0
200	17.1	44.6	89.1	133.7	222.9	371.5	668.6
250	16.2	42.2	84.4	126.6	211.0	351.7	633.0
300	15.4	40.3	80.6	120.8	201.4	335.6	604.1
325	15.1	39.5	78.9	118.4	197.3	328.8	591.8
350	14.9	38.8	77.6	116.4	194.0	323.3	581.9
375	14.6	38.2	76.4	114.5	190.9	318.1	572.7
400	14.5	37.8	75.7	113.5	189.2	315.4	567.7
425	14.4	37.5	75.0	112.5	187.6	312.6	562.7
450	14.3	37.3	74.7	112.0	186.7	311.1	560.0
475	14.3	37.3	74.6	111.9	186.5	310.9	559.6
500	13.7	35.6	71.5	107.1	178.6	297.5	535.4
538	11.0	29.0	57.9	86.9	145.1	241.7	435.1
550	11.0	29.0	57.9	86.9	145.1	241.7	435.1
575	10.9	28.6	57.1	85.7	143.0	238.3	428.8
600	10.3	26.9	53.5	80.4	134.0	223.4	401.9
625	8.7	23.0	45.7	68.6	114.3	190.6	342.8
650	6.9	17.9	35.5	53.1	88.6	147.9	266.1
675	6.2	16.0	31.6	47.3	78.9	131.7	237.0
700	4.8	12.4	25.0	37.3	62.3	103.7	186.5
725	3.7	9.7	19.5	28.9	48.3	80.2	144.5
750	2.8	7.4	14.8	22.1	36.7	61.2	110.3
775	2.2	5.8	11.4	17.2	28.5	47.6	85.6
800	1.8	4.4	8.8	13.2	22.0	36.6	65.6
816	1.4	3.4	7.2	10.7	17.9	29.6	53.1

Table 2-2.6 Ratings for Group 2.6 Materials

A 312 Gr. TP309H A 240 Gr. 309H A 358 Gr. 309H

A – Standard Class

Temperature, °C	Working Pressures by Class, bar						
	150	300	600	900	1500	2500	4500
−29 to 38	19.0	49.6	99.3	148.9	248.2	413.7	744.6
50	18.5	48.3	96.6	144.9	241.5	402.5	724.4
100	16.5	43.1	86.2	129.3	215.5	359.2	646.5
150	15.3	40.0	80.0	120.0	200.0	333.3	599.9
200	13.8	37.8	75.5	113.3	188.8	314.7	566.4
250	12.1	36.1	72.1	108.2	180.4	300.6	541.1
300	10.2	34.8	69.6	104.4	173.9	289.9	521.8
325	9.3	34.2	68.5	102.7	171.2	285.4	513.7
350	8.4	33.8	67.6	101.4	169.0	281.7	507.0
375	7.4	33.4	66.8	100.1	166.9	278.2	500.7
400	6.5	33.1	66.1	99.2	165.4	275.6	496.1
425	5.5	32.6	65.3	97.9	163.1	271.9	489.4
450	4.6	32.2	64.4	96.5	160.9	268.2	482.7
475	3.7	31.7	63.4	95.1	158.2	263.9	474.8
500	2.8	28.2	56.5	84.7	140.9	235.0	423.0
538	1.4	25.2	50.0	75.2	125.5	208.9	375.8
550	1.4(a)	25.0	49.8	74.8	124.9	208.0	374.2
575	1.4(a)	22.2	44.4	66.5	110.9	184.8	332.7
600	1.4(a)	16.8	33.5	50.3	83.9	139.8	251.6
625	1.4(a)	12.5	25.0	37.5	62.5	104.2	187.6
650	1.4(a)	9.4	18.7	28.1	46.8	78.0	140.4
675	1.4(a)	7.2	14.5	21.7	36.2	60.3	108.5
700	1.4(a)	5.5	11.0	16.5	27.5	45.9	82.5
725	1.4(a)	4.3	8.7	13.0	21.6	36.0	64.9
750	1.3(a)	3.4	6.8	10.2	17.1	28.4	51.2
775	1.0(a)	2.7	5.4	8.1	13.5	22.4	40.4
800	0.8(a)	2.1	4.2	6.3	10.5	17.5	31.6
816	0.7(a)	1.8	3.5	5.3	8.9	14.8	26.6

GENERAL NOTE:
(a) Flanged end valve ratings terminate at 538°C.

Table 2-2.6 Ratings for Group 2.6 Materials (Cont'd)

A 312 Gr. TP309H A 240 Gr. 309H A 358 Gr. 309H

B – Special Class

Temperature, °C	Working Pressures by Class, bar						
	150	300	600	900	1500	2500	4500
−29 to 38	20.0	51.7	103.4	155.1	258.6	430.9	775.7
50	20.0	51.7	103.4	155.1	258.6	430.9	775.7
100	18.4	48.1	96.2	144.3	240.5	400.9	721.6
150	17.1	44.6	89.3	133.9	223.2	372.0	669.6
200	16.2	42.1	84.3	126.4	210.7	351.2	632.2
250	15.4	40.3	80.5	120.8	201.3	335.5	603.9
300	14.9	38.8	77.7	116.5	194.1	323.6	582.4
325	14.7	38.2	76.5	114.7	191.1	318.5	573.4
350	14.5	37.7	75.5	113.2	188.6	314.4	565.9
375	14.3	37.3	74.5	111.8	186.3	310.4	558.8
400	14.2	36.9	73.8	110.7	184.6	307.6	553.7
425	14.0	36.4	72.8	109.2	182.1	303.5	546.2
450	13.8	35.9	71.8	107.8	179.6	299.3	538.8
475	13.6	35.4	70.8	106.3	177.1	295.2	531.3
500	13.4	34.9	69.8	104.8	174.6	291.0	523.8
538	11.0	29.0	57.9	86.9	145.1	241.7	435.1
550	11.0	29.0	57.9	86.9	145.1	241.7	435.1
575	10.6	27.7	55.4	83.2	138.6	231.0	415.8
600	8.0	21.0	41.9	62.9	104.8	174.7	314.5
625	6.0	15.6	31.3	46.9	78.2	130.3	234.5
650	4.5	11.7	23.4	35.1	58.5	97.5	175.5
675	3.5	9.0	18.1	27.1	45.2	75.3	135.6
700	3.0	7.7	15.4	23.2	38.6	64.4	115.9
725	2.3	6.1	12.1	18.2	30.4	50.6	91.1
750	1.7	4.6	9.1	13.7	22.8	37.9	68.3
775	1.3	3.4	6.8	10.2	16.9	28.2	50.8
800	1.1	3.0	5.9	8.9	14.8	24.7	44.5
816	0.8	2.2	4.4	6.6	11.1	18.5	33.2

Table 2-2.7 Ratings for Group 2.7 Materials

A 182 Gr. F310H	A 312 Gr. TP310H	A 358 Gr. TP310H
A 240 Gr. 310H	A 479 Gr. 310H	

A – Standard Class

Temperature, °C	Working Pressures by Class, bar						
	150	300	600	900	1500	2500	4500
−29 to 38	19.0	49.6	99.3	148.9	248.2	413.7	744.6
50	18.5	48.4	96.7	145.1	241.8	403.1	725.5
100	16.6	43.4	86.8	130.2	217.0	361.6	650.9
150	15.3	40.0	80.0	120.0	200.0	333.3	599.9
200	13.8	37.6	75.2	112.8	188.0	313.4	564.1
250	12.1	35.8	71.5	107.3	178.8	298.1	536.5
300	10.2	34.5	68.9	103.4	172.3	287.2	516.9
325	9.3	33.9	67.7	101.6	169.3	282.2	507.9
350	8.4	33.3	66.6	99.9	166.5	277.6	499.6
375	7.4	32.9	65.7	98.6	164.3	273.8	492.9
400	6.5	32.4	64.8	97.3	162.1	270.2	486.3
425	5.5	32.1	64.2	96.4	160.6	267.7	481.8
450	4.6	31.7	63.4	95.1	158.4	264.0	475.3
475	3.7	31.2	62.5	93.7	156.2	260.3	468.6
500	2.8	28.2	56.5	84.7	140.9	235.0	423.0
538	1.4	25.2	50.0	75.2	125.5	208.9	375.8
550	1.4(a)	25.0	49.8	74.8	124.9	208.0	374.2
575	1.4(a)	22.2	44.4	66.5	110.9	184.8	332.7
600	1.4(a)	16.8	33.5	50.3	83.9	139.8	251.6
625	1.4(a)	12.5	25.0	37.5	62.5	104.2	187.6
650	1.4(a)	9.4	18.7	28.1	46.8	78.0	140.4
675	1.4(a)	7.2	14.5	21.7	36.2	60.3	108.5
700	1.4(a)	5.5	11.0	16.5	27.5	45.9	82.5
725	1.4(a)	4.3	8.7	13.0	21.6	36.0	64.9
750	1.3(a)	3.4	6.8	10.2	17.1	28.4	51.2
775	1.0(a)	2.7	5.3	8.0	13.3	22.1	39.8
800	0.8(a)	2.1	4.1	6.2	10.3	17.2	31.0
816	0.7(a)	1.8	3.5	5.3	8.9	14.8	26.6

GENERAL NOTE:
(a) Flanged end valve ratings terminate at 538°C.

Table 2-2.7 Ratings for Group 2.7 Materials (Cont'd)

A 182 Gr. F310H	A 312 Gr. TP310H	A 358 Gr. TP310H
A 240 Gr. 310H	A 479 Gr. 310H	

B – Special Class

Temperature, °C	Working Pressures by Class, bar						
	150	300	600	900	1500	2500	4500
−29 to 38	20.0	51.7	103.4	155.1	258.6	430.9	775.7
50	20.0	51.7	103.4	155.1	258.6	430.9	775.7
100	18.6	48.4	96.9	145.3	242.2	403.6	726.5
150	17.1	44.6	89.3	133.9	223.2	371.9	669.5
200	16.1	42.0	83.9	125.9	209.9	349.8	629.6
250	15.3	39.9	79.8	119.8	199.6	332.7	598.8
300	14.7	38.5	76.9	115.4	192.3	320.5	576.9
325	14.5	37.8	75.6	113.4	189.0	314.9	566.9
350	14.2	37.2	74.3	111.5	185.9	309.8	557.6
375	14.1	36.7	73.3	110.0	183.4	305.6	550.1
400	13.9	36.2	72.4	108.5	180.9	301.5	542.7
425	13.7	35.9	71.7	107.6	179.3	298.8	537.8
450	13.6	35.4	70.7	106.1	176.8	294.7	530.4
475	13.4	34.9	69.7	104.6	174.3	290.5	523.0
500	13.2	34.4	68.7	103.1	171.8	286.4	515.5
538	11.0	29.0	57.9	86.9	145.1	241.7	435.1
550	11.0	29.0	57.9	86.9	145.1	241.7	435.1
575	10.6	27.7	55.4	83.2	138.6	231.0	415.8
600	8.0	21.0	41.9	62.9	104.8	174.7	314.5
625	6.0	15.6	31.3	46.9	78.2	130.3	234.5
650	4.5	11.7	23.4	35.1	58.5	97.5	175.5
675	3.5	9.0	18.1	27.1	45.2	75.3	135.6
700	3.0	7.7	15.4	23.2	38.6	64.4	115.9
725	2.3	6.1	12.1	18.2	30.4	50.6	91.1
750	1.7	4.6	9.1	13.7	22.8	37.9	68.3
775	1.3	3.3	6.7	10.0	16.7	27.9	50.1
800	1.1	2.9	5.8	8.6	14.4	24.0	43.2
816	0.8	2.2	4.4	6.6	11.1	18.5	33.2

Table 2-2.8 Ratings for Group 2.8 Materials

A 182 Gr. F44	A 240 Gr. S31803 (1)	A 479 Gr. S31254	A 790 Gr. S31803 (1)
A 182 Gr. F51 (1)	A 240 Gr. S32760 (1)	A 479 Gr. S32750 (1)	A 790 Gr. S32760 (1)
A 182 Gr. F55	A 240 Gr. S31254	A 789 Gr. S32750 (1)	A 351 Gr.CE8MN (1)
A 182 Gr. F53 (1)	A 240 Gr. S32750 (1)	A 789 Gr. S32760 (1)	A 351 Gr.CD4MCu (1)
A 312 Gr. 31254	A 351 Gr. CK3MCuN	A 789 Gr. S31803 (1)	A 351 Gr.CD3MWCuN (1)
A 358 Gr. S31254	A 479 Gr. S31803 (1)	A 790 Gr. S32750 (1)	

NOTE:
(1) This steel may become brittle after service at moderately elevated temperatures. Not to be used over 315°C.

A – Standard Class

Temperature, °C	Working Pressures by Class, bar						
	150	300	600	900	1500	2500	4500
−29 to 38	20.0	51.7	103.4	155.1	258.6	430.9	775.7
50	19.5	51.7	103.4	155.1	258.6	430.9	775.7
100	17.7	50.7	101.3	152.0	253.3	422.2	759.9
150	15.8	45.9	91.9	137.8	229.6	382.7	688.9
200	13.8	42.7	85.3	128.0	213.3	355.4	639.8
250	12.1	40.5	80.9	121.4	202.3	337.2	606.9
300	10.2	38.9	77.7	116.6	194.3	323.8	582.8
325	9.3	38.2	76.3	114.5	190.8	318.0	572.5
350	8.4	37.6	75.3	112.9	188.2	313.7	564.7
375	7.4	37.4	74.7	112.1	186.8	311.3	560.3
400	6.5	36.5	73.3	109.8	183.1	304.9	548.5

B – Special Class

Temperature, °C	Working Pressures by Class, bar						
	150	300	600	900	1500	2500	4500
−29 to 38	20.0	51.7	103.4	155.1	258.6	430.9	775.7
50	20.0	51.7	103.4	155.1	258.6	430.9	775.7
100	20.0	51.7	103.4	155.1	258.6	430.9	775.7
150	19.6	51.3	102.5	153.8	256.3	427.2	768.9
200	18.2	47.6	95.2	142.8	238.0	396.7	714.1
250	17.3	45.2	90.3	135.5	225.8	376.3	677.4
300	16.6	43.4	86.7	130.1	216.8	361.4	650.4
325	16.3	42.6	85.2	127.8	213.0	355.0	638.9
350	16.1	42.0	84.0	126.1	210.1	350.2	630.3
375	16.0	41.7	83.4	125.1	208.4	347.4	625.3
400	15.2	39.7	79.4	119.1	198.6	330.9	595.7

Table 2-2.9 Ratings for Group 2.9 Materials

A 240 Gr. 309S (1)(2)(3)	A 240 Gr. 310S (1)(2)(3)	A 479 Gr. 310S (1)(2)(3)

NOTES:
(1) At temperatures above 538°C, use only when the carbon content is 0.04% or higher.
(2) For temperatures above 538°C, use only if the material is solution heat treated to the minimum temperature specified in the material specification but not lower than 1040°C and quenching in water or rapidly cooling by other means.
(3) This material should be used for service temperatures 515°C and above only when assurance is provided that grain size is not finer than ASTM 6.

A – Standard Class

Temperature, °C	Working Pressures by Class, bar						
	150	300	600	900	1500	2500	4500
−29 to 38	19.0	49.6	99.3	148.9	248.2	413.7	744.6
50	18.5	48.3	96.6	144.9	241.5	402.5	724.4
100	16.5	43.1	86.2	129.3	215.5	359.2	646.5
150	15.3	40.0	80.0	120.0	200.0	333.3	599.9
200	13.8	37.6	75.2	112.8	188.0	313.4	564.1
250	12.1	35.8	71.5	107.3	178.8	298.1	536.5
300	10.2	34.5	68.9	103.4	172.3	287.2	516.9
325	9.3	33.9	67.7	101.6	169.3	282.2	507.9
350	8.4	33.3	66.6	99.9	166.5	277.6	499.6
375	7.4	32.9	65.7	98.6	164.3	273.8	492.9
400	6.5	32.4	64.8	97.3	162.1	270.2	486.3
425	5.5	32.1	64.2	96.4	160.6	267.7	481.8
450	4.6	31.7	63.4	95.1	158.4	264.0	475.3
475	3.7	31.2	62.5	93.7	156.2	260.3	468.6
500	2.8	28.2	56.5	84.7	140.9	235.0	423.0
538	1.4	23.4	46.8	70.2	117.0	195.0	351.0
550	1.4(a)	20.5	41.0	61.5	102.5	170.8	307.4
575	1.4(a)	15.1	30.2	45.3	75.5	125.8	226.4
600	1.4(a)	11.0	22.1	33.1	55.1	91.9	165.4
625	1.4(a)	8.1	16.3	24.4	40.7	67.9	122.2
650	1.4(a)	5.8	11.6	17.4	29.1	48.5	87.2
675	1.4(a)	3.7	7.4	11.1	18.4	30.7	55.3
700	0.8(a)	2.2	4.3	6.5	10.8	18.0	32.3
725	0.5(a)	1.4	2.7	4.1	6.8	11.4	20.5
750	0.4(a)	1.0	2.1	3.1	5.2	8.6	15.5
775	0.3(a)	0.8	1.6	2.5	4.1	6.8	12.3
800	0.2(a)	0.6	1.2	1.8	3.0	5.0	9.1
816	0.2(a)	0.5	0.9	1.4	2.4	3.9	7.1

GENERAL NOTE:
(a) Flanged end valve ratings terminate at 538°C.

Table 2-2.9 Ratings for Group 2.9 Materials (Cont'd)

A 240 Gr. 309S (1)(2)(3)	A 240 Gr. 310S (1)(2)(3)	A 479 Gr. 310S (1)(2)(3)

NOTES:
(1) At temperatures above 538°C, use only when the carbon content is 0.04% or higher.
(2) For temperatures above 538°C, use only if the material is solution heat treated to the minimum temperature specified in the material specification but not lower than 1040°C and quenching in water or rapidly cooling by other means.
(3) This material should be used for service temperatures 515°C and above only when assurance is provided that grain size is not finer than ASTM 6.

B – Special Class

Temperature °C	Working Pressures by Class, bar						
	150	300	600	900	1500	2500	4500
−29 to 38	20.0	51.7	103.4	155.1	258.6	430.9	775.7
50	20.0	51.7	103.4	155.1	258.6	430.9	775.7
100	18.4	48.1	96.2	144.3	240.5	400.9	721.6
150	17.1	44.6	89.3	133.9	223.2	371.9	669.5
200	16.1	42.0	83.9	125.9	209.9	349.8	629.6
250	15.3	39.9	79.8	119.8	199.6	332.7	598.8
300	14.7	38.5	76.9	115.4	192.3	320.5	576.9
325	14.5	37.8	75.6	113.4	189.0	314.9	566.9
350	14.2	37.2	74.3	111.5	185.9	309.8	557.6
375	14.1	36.7	73.3	110.0	183.4	305.6	550.1
400	13.9	36.2	72.4	108.5	180.9	301.5	542.7
425	13.7	35.9	71.7	107.6	179.3	298.8	537.8
450	13.6	35.4	70.7	106.1	176.8	294.7	530.4
475	13.4	34.9	69.7	104.6	174.3	290.5	523.0
500	13.2	34.4	68.7	103.1	171.8	286.4	515.5
538	11.0	29.0	57.9	86.9	145.1	241.7	435.1
550	9.8	25.6	51.2	76.8	128.1	213.4	384.2
575	7.2	18.9	37.7	56.6	94.3	157.2	283.0
600	5.3	13.8	27.6	41.3	68.9	114.8	206.7
625	3.9	10.2	20.4	30.5	50.9	84.9	152.7
650	2.8	7.3	14.5	21.8	36.3	60.6	109.0
675	1.8	4.6	9.2	13.8	23.0	38.4	69.1
700	1.3	3.4	6.9	10.3	17.2	28.6	51.5
725	0.8	2.1	4.2	6.3	10.5	17.6	31.6
750	0.5	1.4	2.7	4.1	6.8	11.3	20.4
775	0.4	1.0	2.1	3.1	5.2	8.6	15.5
800	0.3	0.9	1.8	2.7	4.5	7.4	13.4
816	0.2	0.6	1.2	1.8	3.0	4.9	8.9

Table 2-2.10 Ratings for Group 2.10 Materials

A 351 Gr. CH8 (1)	A 351 Gr. CH20 (1)

NOTE:
(1) At temperatures above 538°C, use only when the carbon content is 0.04% or higher.

A – Standard Class

Temperature, °C	Working Pressures by Class, bar						
	150	300	600	900	1500	2500	4500
−29 to 38	17.8	46.3	92.7	139.0	231.7	386.1	695.0
50	17.0	44.5	89.0	133.4	222.4	370.6	667.1
100	14.4	37.5	75.1	112.6	187.7	312.8	563.0
150	13.4	34.9	69.8	104.7	174.4	290.7	523.3
200	12.9	33.5	67.1	100.6	167.7	279.5	503.2
250	12.1	32.6	65.2	97.8	163.1	271.8	489.2
300	10.2	31.7	63.4	95.2	158.6	264.3	475.8
325	9.3	31.2	62.4	93.6	156.1	260.1	468.2
350	8.4	30.6	61.2	91.7	152.9	254.8	458.7
375	7.4	29.8	59.7	89.5	149.2	248.6	447.5
400	6.5	29.1	58.2	87.3	145.5	242.4	436.4
425	5.5	28.3	56.7	85.0	141.7	236.2	425.2
450	4.6	27.6	55.2	82.8	138.0	230.0	414.0
475	3.7	26.7	53.5	80.2	133.7	222.8	401.0
500	2.8	25.8	51.7	77.5	129.2	215.3	387.6
538	1.4	23.3	46.6	70.0	116.6	194.4	349.9
550	1.4(a)	21.9	43.8	65.7	109.5	182.5	328.5
575	1.4(a)	18.5	37.0	55.5	92.4	154.0	277.3
600	1.4(a)	14.5	29.0	43.5	72.6	121.0	217.7
625	1.4(a)	11.4	22.8	34.3	57.1	95.2	171.3
650	1.4(a)	8.9	17.8	26.7	44.5	74.1	133.5
675	1.4(a)	7.0	14.0	20.9	34.9	58.2	104.7
700	1.4(a)	5.7	11.3	17.0	28.3	47.2	85.0
725	1.4(a)	4.6	9.1	13.7	22.8	38.0	68.4
750	1.3(a)	3.5	7.0	10.5	17.5	29.2	52.5
775	1.0(a)	2.6	5.1	7.7	12.8	21.4	38.4
800	0.8(a)	2.0	4.0	6.1	10.1	16.9	30.4
816	0.7(a)	1.9	3.8	5.7	9.5	15.8	28.4

GENERAL NOTE:
(a) Flanged end valve ratings terminate at 538°C.

Table 2-2.10 Ratings for Group 2.10 Materials (Cont'd)

A 351 Gr. CH8 (1)	A 351 Gr. CH20 (1)

NOTE:
(1) At temperatures above 538°C, use only when the carbon content is 0.04% or higher.

B – Special Class

Temperature, °C	Working Pressures by Class, bar						
	150	300	600	900	1500	2500	4500
−29 to 38	18.4	48.0	96.0	144.1	240.1	400.1	720.3
50	17.9	46.8	93.5	140.3	233.8	389.6	701.4
100	16.1	41.9	83.8	125.7	209.5	349.1	628.4
150	14.9	38.9	77.9	116.8	194.7	324.5	584.0
200	14.4	37.4	74.9	112.3	187.2	312.0	561.6
250	14.0	36.4	72.8	109.2	182.0	303.3	546.0
300	13.6	35.4	70.8	106.2	177.0	295.0	531.0
325	13.4	34.8	69.7	104.5	174.2	290.3	522.6
350	13.1	34.1	68.3	102.4	170.6	284.4	511.9
375	12.8	33.3	66.6	99.9	166.5	277.5	499.5
400	12.4	32.5	64.9	97.4	162.3	270.6	487.0
425	12.1	31.6	63.3	94.9	158.2	263.6	474.5
450	11.8	30.8	61.6	92.4	154.0	256.7	462.1
475	11.4	29.8	59.7	89.5	149.2	248.6	447.6
500	11.1	28.8	57.7	86.5	144.2	240.3	432.6
538	10.5	27.3	54.7	82.0	136.7	227.8	410.0
550	10.1	26.4	52.7	79.1	131.8	219.6	395.4
575	8.9	23.1	46.2	69.3	115.5	192.6	346.6
600	7.0	18.1	36.3	54.4	90.7	151.2	272.1
625	5.5	14.3	28.6	42.8	71.4	119.0	214.2
650	4.3	11.1	22.2	33.4	55.6	92.7	166.8
675	3.3	8.7	17.5	26.2	43.6	72.7	130.9
700	3.0	7.7	15.4	23.1	38.6	64.3	115.7
725	2.4	6.4	12.7	19.1	31.8	53.1	95.5
750	1.8	4.7	9.5	14.2	23.6	39.4	70.9
775	1.2	3.2	6.5	9.7	16.2	27.0	48.6
800	1.0	2.7	5.3	8.0	13.3	22.2	40.0
816	0.9	2.4	4.7	7.1	11.8	19.7	35.5

Table 2-2.11 Ratings for Group 2.11 Materials

A 351 Gr. CF8C (1)

NOTE:
(1) At temperatures above 538°C, use only when the carbon content is 0.04% or higher.

A – Standard Class

Temperature, °C	Working Pressures by Class, bar						
	150	300	600	900	1500	2500	4500
−29 to 38	19.0	49.6	99.3	148.9	248.2	413.7	744.6
50	18.7	48.8	97.5	146.3	243.8	406.4	731.5
100	17.4	45.3	90.6	135.9	226.5	377.4	679.4
150	15.8	42.5	84.9	127.4	212.4	353.9	637.1
200	13.8	39.9	79.9	119.8	199.7	332.8	599.1
250	12.1	37.8	75.6	113.4	189.1	315.1	567.2
300	10.2	36.1	72.2	108.3	180.4	300.7	541.3
325	9.3	35.4	70.7	106.1	176.8	294.6	530.3
350	8.4	34.8	69.5	104.3	173.8	289.6	521.3
375	7.4	34.2	68.4	102.6	171.0	285.1	513.1
400	6.5	33.9	67.8	101.7	169.5	282.6	508.6
425	5.5	33.6	67.2	100.8	168.1	280.1	504.2
450	4.6	33.5	66.9	100.4	167.3	278.8	501.8
475	3.7	31.7	63.4	95.1	158.2	263.9	474.8
500	2.8	28.2	56.5	84.7	140.9	235.0	423.0
538	1.4	25.2	50.0	75.2	125.5	208.9	375.8
550	1.4(a)	25.0	49.8	74.8	124.9	208.0	374.2
575	1.4(a)	24.0	47.9	71.8	119.7	199.5	359.1
600	1.4(a)	19.8	39.6	59.4	99.0	165.1	297.1
625	1.4(a)	13.9	27.7	41.6	69.3	115.5	207.9
650	1.4(a)	10.3	20.6	30.9	51.5	85.8	154.5
675	1.4(a)	8.0	15.9	23.9	39.8	66.3	119.4
700	1.4(a)	5.6	11.2	16.8	28.1	46.8	84.2
725	1.4(a)	4.0	8.0	11.9	19.9	33.1	59.6
750	1.2(a)	3.1	6.2	9.3	15.5	25.8	46.4
775	0.9(a)	2.5	4.9	7.4	12.3	20.4	36.8
800	0.8(a)	2.0	4.0	6.1	10.1	16.9	30.4
816	0.7(a)	1.9	3.8	5.7	9.5	15.8	28.4

GENERAL NOTE:
(a) Flanged end valve ratings terminate at 538°C.

Table 2-2.11 Ratings for Group 2.11 Materials (Cont'd)

A 351 Gr. CF8C (1)

NOTE:
(1) At temperatures above 538°C, use only when the carbon content is 0.04% or higher.

B – Special Class

Temperature, °C	Working Pressures by Class, bar						
	150	300	600	900	1500	2500	4500
−29 to 38	19.8	51.7	103.4	155.1	258.6	430.9	775.7
50	19.6	51.2	102.4	153.6	256.0	426.7	768.1
100	18.8	48.9	97.9	146.8	244.7	407.8	734.1
150	17.4	45.4	90.8	136.1	226.9	378.2	680.7
200	16.5	43.1	86.1	129.2	215.3	358.8	645.8
250	16.0	41.6	83.3	124.9	208.2	347.0	624.5
300	15.4	40.2	80.3	120.5	200.9	334.8	602.6
325	15.1	39.5	78.9	118.4	197.3	328.8	591.8
350	14.9	38.8	77.6	116.4	194.0	323.3	581.9
375	14.6	38.2	76.4	114.5	190.9	318.1	572.7
400	14.5	37.8	75.7	113.5	189.2	315.4	567.7
425	14.4	37.5	75.0	112.5	187.6	312.6	562.7
450	14.3	37.3	74.7	112.0	186.7	311.1	560.0
475	14.3	37.3	74.6	111.9	186.5	310.9	559.6
500	13.7	35.6	71.5	107.1	178.6	297.5	535.4
538	11.0	29.0	57.9	86.9	145.1	241.7	435.1
550	11.0	29.0	57.9	86.9	145.1	241.7	435.1
575	10.9	28.6	57.1	85.7	143.0	238.3	428.8
600	9.5	24.8	49.5	74.3	123.8	206.4	371.4
625	6.6	17.3	34.6	52.0	86.6	144.3	259.8
650	4.9	12.9	25.7	38.6	64.4	107.3	193.1
675	3.8	9.9	19.9	29.8	49.7	82.9	149.2
700	3.1	8.2	16.4	24.5	40.9	68.2	122.7
725	2.3	5.9	11.8	17.7	29.5	49.2	88.5
750	1.6	4.1	8.2	12.2	20.4	34.0	61.2
775	1.2	3.1	6.2	9.3	15.5	25.8	46.4
800	1.0	2.7	5.3	8.0	13.3	22.2	40.0
816	0.9	2.4	4.7	7.1	11.8	19.7	35.5

Table 2-2.12 Ratings for Group 2.12 Materials

A 351 Gr. CK20 (1)

NOTE:
(1) At temperatures above 538°C, use only when the carbon content is 0.04% or higher.

A – Standard Class

Temperature, °C	Working Pressures by Class, bar						
	150	300	600	900	1500	2500	4500
−29 to 38	17.8	46.3	92.7	139.0	231.7	386.1	695.0
50	17.0	44.5	89.0	133.4	222.4	370.6	667.1
100	14.4	37.5	75.1	112.6	187.7	312.8	563.0
150	13.4	34.9	69.8	104.7	174.4	290.7	523.3
200	12.9	33.5	67.1	100.6	167.7	279.5	503.2
250	12.1	32.6	65.2	97.8	163.1	271.8	489.2
300	10.2	31.7	63.4	95.2	158.6	264.3	475.8
325	9.3	31.2	62.4	93.6	156.1	260.1	468.2
350	8.4	30.6	61.2	91.7	152.9	254.8	458.7
375	7.4	29.8	59.7	89.5	149.2	248.6	447.5
400	6.5	29.1	58.2	87.3	145.5	242.4	436.4
425	5.5	28.3	56.7	85.0	141.7	236.2	425.2
450	4.6	27.6	55.2	82.8	138.0	230.0	414.0
475	3.7	26.7	53.5	80.2	133.7	222.8	401.0
500	2.8	25.8	51.7	77.5	129.2	215.3	387.6
538	1.4	23.3	46.6	70.0	116.6	194.4	349.9
550	1.4(a)	22.9	45.9	68.8	114.7	191.2	344.1
575	1.4(a)	21.7	43.3	65.0	108.3	180.4	324.8
600	1.4(a)	19.4	38.8	58.2	97.1	161.8	291.2
625	1.4(a)	16.8	33.7	50.5	84.1	140.2	252.4
650	1.4(a)	14.1	28.1	42.2	70.4	117.3	211.1
675	1.4(a)	11.5	23.0	34.6	57.6	96.0	172.8
700	1.4(a)	8.8	17.5	26.3	43.8	73.0	131.5
725	1.4(a)	6.3	12.7	19.0	31.7	52.9	95.2
750	1.4(a)	4.5	8.9	13.4	22.3	37.2	66.9
775	1.2(a)	3.1	6.3	9.4	15.7	26.2	47.2
800	0.9(a)	2.3	4.6	6.9	11.4	19.1	34.3
816	0.7(a)	1.9	3.8	5.7	9.5	15.8	28.4

GENERAL NOTE:
(a) Flanged end valve ratings terminate at 538°C.

Table 2-2.12 Ratings for Group 2.12 Materials (Cont'd)

A 351 Gr. CK20 (1)

NOTE:
(1) At temperatures above 538°C, use only when the carbon content is 0.04% or higher.

B – Special Class

Temperature, °C	Working Pressures by Class, bar						
	150	300	600	900	1500	2500	4500
−29 to 38	18.4	48.0	96.0	144.1	240.1	400.1	720.3
50	17.9	46.8	93.5	140.3	233.8	389.6	701.4
100	16.1	41.9	83.8	125.7	209.5	349.1	628.4
150	14.9	38.9	77.9	116.8	194.7	324.5	584.0
200	14.4	37.4	74.9	112.3	187.2	312.0	561.6
250	14.0	36.4	72.8	109.2	182.0	303.3	546.0
300	13.6	35.4	70.8	106.2	177.0	295.0	531.0
325	13.4	34.8	69.7	104.5	174.2	290.3	522.6
350	13.1	34.1	68.3	102.4	170.6	284.4	511.9
375	12.8	33.3	66.6	99.9	166.5	277.5	499.5
400	12.4	32.5	64.9	97.4	162.3	270.6	487.0
425	12.1	31.6	63.3	94.9	158.2	263.6	474.5
450	11.8	30.8	61.6	92.4	154.0	256.7	462.1
475	11.4	29.8	59.7	89.5	149.2	248.6	447.6
500	11.1	28.8	57.7	86.5	144.2	240.3	432.6
538	10.5	27.3	54.7	82.0	136.7	227.8	410.0
550	10.6	27.7	55.3	83.0	138.3	230.5	414.9
575	10.4	27.1	54.1	81.2	135.3	225.6	406.0
600	9.3	24.3	48.5	72.8	121.3	202.2	364.0
625	8.1	21.0	42.1	63.1	105.2	175.3	315.5
650	6.7	17.6	35.2	52.8	87.9	146.6	263.8
675	5.5	14.4	28.8	43.2	72.0	120.0	215.9
700	4.7	12.3	24.7	37.0	61.6	102.7	184.9
725	3.6	9.4	18.8	28.2	47.0	78.4	141.0
750	2.4	6.1	12.3	18.4	30.7	51.2	92.2
775	1.5	4.0	7.9	11.9	19.9	33.1	59.6
800	1.3	3.3	6.5	9.8	16.3	27.2	49.0
816	0.9	2.4	4.7	7.1	11.8	19.7	35.5

Table 2-3.1 Ratings for Group 3.1 Materials

B 462 Gr. N08020 (1)	B 464 Gr. N08020 (1)	B 473 Gr. N08020 (1)
B 463 Gr. N08020 (1)	B 468 Gr. N08020 (1)	

NOTES: Only use annealed material.

A – Standard Class

Temperature, °C	Working Pressures by Class, bar						
	150	300	600	900	1500	2500	4500
−29 to 38	20.0	51.7	103.4	155.1	258.6	430.9	775.7
50	19.5	51.7	103.4	155.1	258.6	430.9	775.7
100	17.7	50.9	101.7	152.6	254.4	423.9	763.1
150	15.8	48.9	97.9	146.8	244.7	407.8	734.1
200	13.8	47.2	94.3	141.5	235.8	392.9	707.3
250	12.1	45.5	91.0	136.5	227.5	379.2	682.5
300	10.2	42.9	85.7	128.6	214.4	357.1	642.6
325	9.3	41.4	82.6	124.0	206.6	344.3	619.6
350	8.4	40.3	80.4	120.7	201.1	335.3	603.3
375	7.4	38.9	77.6	116.5	194.1	323.2	581.8
400	6.5	36.5	73.3	109.8	183.1	304.9	548.5
425	5.5	35.2	70.0	105.1	175.1	291.6	524.7

B – Special Class

Temperature, °C	Working Pressures by Class, bar						
	150	300	600	900	1500	2500	4500
−29 to 38	20.0	51.7	103.4	155.1	258.6	430.9	775.7
50	20.0	51.7	103.4	155.1	258.6	430.9	775.7
100	20.0	51.7	103.4	155.1	258.6	430.9	775.7
150	20.0	51.7	103.4	155.1	258.6	430.9	775.7
200	20.0	51.7	103.4	155.1	258.6	430.9	775.7
250	19.5	50.8	101.6	152.4	253.9	423.2	761.8
300	18.9	49.4	98.7	148.1	246.8	411.3	740.3
325	18.7	48.8	97.5	146.3	243.8	406.3	731.3
350	18.5	48.3	96.6	144.9	241.5	402.5	724.5
375	18.4	48.0	95.9	143.9	239.8	399.7	719.5
400	18.2	47.6	95.2	142.8	238.0	396.7	714.1
425	17.9	46.6	93.2	139.8	233.0	388.4	699.1

Table 2-3.2 Ratings for Group 3.2 Materials

B 160 Gr. N02200 (1)(2)	B 161 Gr. N02200 (1)	B 162 Gr. N02200 (1)	B 163 Gr. N02200 (1)

NOTES:
(1) Only use annealed material.
(2) For forgings, the chemical composition, mechanical properties, heat treating requirements, and grain size requirements shall conform to the applicable ASTM specification. The manufacturing procedures, tolerances, tests, certification, and markings shall be in accordance with ASTM B 564.

A – Standard Class

Temperature, °C	Working Pressures by Class, bar						
	150	300	600	900	1500	2500	4500
−29 to 38	12.7	33.1	66.2	99.3	165.5	275.8	496.4
50	12.7	33.1	66.2	99.3	165.5	275.8	496.4
100	12.7	33.1	66.2	99.3	165.5	275.8	496.4
150	12.7	33.1	66.2	99.3	165.5	275.8	496.4
200	12.7	33.1	66.2	99.3	165.5	275.8	496.4
250	12.1	31.6	63.2	94.8	158.0	263.4	474.0
300	10.2	29.2	58.5	87.7	146.2	243.7	438.7
325	7.2	18.8	37.6	56.4	93.9	156.5	281.8

B – Special Class

Temperature, °C	Working Pressures by Class, bar						
	150	300	600	900	1500	2500	4500
−29 to 38	14.2	36.9	73.9	110.8	184.7	307.8	554.0
50	14.2	36.9	73.9	110.8	184.7	307.8	554.0
100	14.2	36.9	73.9	110.8	184.7	307.8	554.0
150	14.2	36.9	73.9	110.8	184.7	307.8	554.0
200	14.2	36.9	73.9	110.8	184.7	307.8	554.0
250	13.5	35.3	70.5	105.8	176.4	293.9	529.1
300	12.5	32.6	65.3	97.9	163.2	272.0	489.7
325	8.0	21.0	41.9	62.9	104.8	174.7	314.5

Table 2-3.3 Ratings for Group 3.3 Materials

B 160 Gr. N02201 (1)(2)	B 162 Gr. N02201 (1)

NOTES:

(1) Only use annealed material.

(2) For forgings, the chemical composition, mechanical properties, heat treating requirements, and grain size requirements shall conform to the applicable ASTM specification. The manufacturing procedures, tolerances, tests, certification, and markings shall be in accordance with ASTM B 564.

A – Standard Class

Temperature, °C	Working Pressures by Class, bar						
	150	300	600	900	1500	2500	4500
−29 to 38	6.3	16.5	33.1	49.6	82.7	137.9	248.2
50	6.3	16.4	32.8	49.2	82.0	136.7	246.0
100	6.1	15.8	31.7	47.5	79.2	132.0	237.7
150	6.0	15.6	31.1	46.7	77.8	129.6	233.3
200	6.0	15.6	31.1	46.7	77.8	129.6	233.3
250	6.0	15.6	31.1	46.7	77.8	129.6	233.3
300	6.0	15.6	31.1	46.7	77.8	129.6	233.3
325	5.9	15.5	31.0	46.5	77.5	129.2	232.5
350	5.9	15.4	30.8	46.2	76.9	128.2	230.8
375	5.9	15.4	30.7	46.1	76.8	128.0	230.5
400	5.8	15.2	30.4	45.6	76.1	126.8	228.2
425	5.5	14.9	29.8	44.7	74.6	124.3	223.7
450	4.6	14.6	29.2	43.8	73.1	121.8	219.2
475	3.7	14.3	28.6	43.0	71.6	119.3	214.8
500	2.8	13.8	27.6	41.4	69.0	115.1	207.1
538	1.4	13.1	26.1	39.2	65.4	108.9	196.1
550	1.4(a)	9.8	19.6	29.5	49.1	81.8	147.3
575	1.4(a)	5.4	10.7	16.1	26.8	44.6	80.3
600	1.4(a)	4.4	8.9	13.3	22.2	37.0	66.7
625	1.3(a)	3.4	6.9	10.3	17.2	28.7	51.7
650	1.1(a)	2.8	5.7	8.5	14.2	23.6	42.6

GENERAL NOTE:

(a) Flanged end valve ratings terminate at 538°C.

B – Special Class

Temperature, °C	Working Pressures by Class, bar						
	150	300	600	900	1500	2500	4500
−29 to 38	7.1	18.5	36.9	55.4	92.3	153.9	277.0
50	7.0	18.3	36.6	54.9	91.5	152.5	274.6
100	6.8	17.7	35.4	53.1	88.4	147.4	265.3
150	6.7	17.4	34.7	52.1	86.8	144.7	260.4
200	6.7	17.4	34.7	52.1	86.8	144.7	260.4
250	6.7	17.4	34.7	52.1	86.8	144.7	260.4
300	6.7	17.4	34.7	52.1	86.8	144.7	260.4
325	6.6	17.3	34.6	51.9	86.5	144.1	259.5
350	6.6	17.2	34.4	51.5	85.9	143.1	257.6
375	6.6	17.1	34.3	51.4	85.7	142.9	257.2
400	6.5	17.0	34.0	50.9	84.9	141.5	254.6
425	6.4	16.6	33.3	49.9	83.2	138.7	249.7
450	6.3	16.3	32.6	48.9	81.6	135.9	244.7
475	6.1	16.0	32.0	47.9	79.9	133.2	239.7
500	5.9	15.4	30.8	46.2	77.0	128.4	231.1
538	5.6	14.6	29.2	43.8	72.9	121.6	218.8
550	4.3	11.3	22.6	33.9	56.5	94.1	169.4
575	2.6	6.7	13.4	20.1	33.4	55.7	100.3
600	2.1	5.6	11.1	16.7	27.8	46.3	83.3
625	1.7	4.3	8.6	12.9	21.5	35.9	64.6
650	1.4	3.5	7.1	10.6	17.7	29.5	53.2

Table 2-3.4 Ratings for Group 3.4 Materials

B 127 Gr. N04400 (1)	B 164 Gr. N04400 (1)	B 165 Gr. N04400 (1)	B 564 Gr. N04400 (1)
B 163 Gr. N04400 (1)	B 164 Gr. N04405 (1)(2)		

NOTES:
(1) Only use annealed material.
(2) For forgings, the chemical composition, mechanical properties, heat treating requirements, and grain size requirements shall conform to the applicable ASTM specification. The manufacturing procedures, tolerances, tests, certification, and markings shall be in accordance with ASTM B 564.

A – Standard Class

Temperature, °C	Working Pressures by Class, bar						
	150	300	600	900	1500	2500	4500
−29 to 38	15.9	41.4	82.7	124.1	206.8	344.7	620.5
50	15.4	40.2	80.5	120.7	201.2	335.3	603.6
100	13.8	35.9	71.9	107.8	179.7	299.5	539.1
150	12.9	33.7	67.5	101.2	168.7	281.1	506.0
200	12.5	32.7	65.4	98.1	163.5	272.4	490.4
250	12.1	32.6	65.2	97.8	163.0	271.7	489.0
300	10.2	32.6	65.2	97.8	163.0	271.7	489.0
325	9.3	32.6	65.2	97.8	163.0	271.7	489.0
350	8.4	32.6	65.1	97.7	162.8	271.3	488.4
375	7.4	32.4	64.8	97.2	161.9	269.9	485.8
400	6.5	32.1	64.2	96.2	160.4	267.4	481.2
425	5.5	31.6	63.3	94.9	158.2	263.6	474.5
450	4.6	26.9	53.8	80.7	134.5	224.2	403.5
475	3.7	20.8	41.5	62.3	103.8	173.0	311.3

B – Special Class

Temperature, °C	Working Pressures by Class, bar						
	150	300	600	900	1500	2500	4500
−29 to 38	17.7	46.2	92.3	138.5	230.9	384.8	692.6
50	17.2	44.9	89.8	134.7	224.6	374.3	673.7
100	15.4	40.1	80.2	120.3	200.6	334.3	601.7
150	14.4	37.6	75.3	112.9	188.2	313.7	564.7
200	14.0	36.5	73.0	109.5	182.4	304.0	547.3
250	13.9	36.4	72.8	109.1	181.9	303.2	545.7
300	13.9	36.4	72.8	109.1	181.9	303.2	545.7
325	13.9	36.4	72.8	109.1	181.9	303.2	545.7
350	13.9	36.3	72.7	109.0	181.7	302.8	545.1
375	13.9	36.1	72.3	108.4	180.7	301.2	542.2
400	13.7	35.8	71.6	107.4	179.0	298.4	537.1
425	13.5	35.3	70.6	105.9	176.5	294.2	529.6
450	12.6	32.9	65.9	98.8	164.7	274.6	494.2
475	9.9	25.9	51.9	77.8	129.7	216.2	389.2

Table 2-3.5 Ratings for Group 3.5 Materials

B 163 Gr. N06600 (1)	B 166 Gr. N06600 (1)	B 168 Gr. N06600 (1)	B 564 Gr. N06600 (1)

NOTE:
(1) Only use annealed material.

A – Standard Class

Temperature, °C	Working Pressures by Class, bar						
	150	300	600	900	1500	2500	4500
−29 to 38	20.0	51.7	103.4	155.1	258.6	430.9	775.7
50	19.5	51.7	103.4	155.1	258.6	430.9	775.7
100	17.7	51.5	103.0	154.6	257.6	429.4	773.0
150	15.8	50.3	100.3	150.6	250.8	418.2	752.8
200	13.8	48.6	97.2	145.8	243.4	405.4	729.8
250	12.1	46.3	92.7	139.0	231.8	386.2	694.8
300	10.2	42.9	85.7	128.6	214.4	357.1	642.6
325	9.3	41.4	82.6	124.0	206.6	344.3	619.6
350	8.4	40.3	80.4	120.7	201.1	335.3	603.3
375	7.4	38.9	77.6	116.5	194.1	323.2	581.8
400	6.5	36.5	73.3	109.8	183.1	304.9	548.5
425	5.5	35.2	70.0	105.1	175.1	291.6	524.7
450	4.6	33.7	67.7	101.4	169.0	281.8	507.0
475	3.7	31.7	63.4	95.1	158.2	263.9	474.8
500	2.8	28.2	56.5	84.7	140.9	235.0	423.0
538	1.4	16.5	33.1	49.6	82.7	137.9	248.2
550	1.4(a)	13.9	27.9	41.8	69.7	116.2	209.2
575	1.4(a)	9.4	18.9	28.3	47.2	78.6	141.5
600	1.4(a)	6.6	13.3	19.9	33.2	55.3	99.6
625	1.4(a)	5.1	10.3	15.4	25.7	42.8	77.0
650	1.4(a)	4.7	9.5	14.2	23.6	39.4	70.9

GENERAL NOTE:
(a) Flanged end valve ratings terminate at 538°C.

B – Special Class

Temperature, °C	Working Pressures by Class, bar						
	150	300	600	900	1500	2500	4500
−29 to 38	20.0	51.7	103.4	155.1	258.6	430.9	775.7
50	20.0	51.7	103.4	155.1	258.6	430.9	775.7
100	20.0	51.7	103.4	155.1	258.6	430.9	775.7
150	20.0	51.7	103.4	155.1	258.6	430.9	775.7
200	20.0	51.7	103.4	155.1	258.6	430.9	775.7
250	20.0	51.7	103.4	155.1	258.6	430.9	775.7
300	20.0	51.7	103.4	155.1	258.6	430.9	775.7
325	20.0	51.7	103.4	155.1	258.6	430.9	775.7
350	19.8	51.5	102.8	154.3	257.1	428.6	771.4
375	19.3	50.6	101.0	151.5	252.5	420.9	757.4
400	19.3	50.3	100.6	150.6	251.2	418.3	753.2
425	19.0	49.6	99.3	148.9	248.2	413.7	744.6
450	18.1	47.3	94.4	141.4	235.8	393.1	707.6
475	16.4	42.8	85.5	128.2	213.7	356.3	641.3
500	13.7	35.6	71.5	107.1	178.6	297.5	535.4
538	7.9	20.7	41.4	62.1	103.4	172.4	310.3
550	6.7	17.4	34.9	52.3	87.2	145.3	261.5
575	4.5	11.8	23.6	35.4	59.0	98.3	176.9
600	3.2	8.3	16.6	24.9	41.5	69.1	124.5
625	2.5	6.4	12.8	19.3	32.1	53.5	96.3
650	2.3	5.9	11.8	17.7	29.5	49.2	88.6

Table 2-3.6 Ratings for Group 3.6 Materials

B 163 Gr. N08800 (1)	B 408 Gr. N08800 (1)	B 409 N08800 (1)	B 564 Gr. N08800 (1)

NOTE:
(1) Only use annealed material.

A – Standard Class

Temperature °C	Working Pressures by Class, bar						
	150	300	600	900	1500	2500	4500
−29 to 38	19.0	49.6	99.3	148.9	248.2	413.7	744.6
50	18.7	48.8	97.6	146.4	244.0	406.7	732.1
100	17.5	45.6	91.2	136.9	228.1	380.1	684.3
150	15.8	44.0	88.0	132.0	219.9	366.6	659.8
200	13.8	42.8	85.6	128.4	214.0	356.7	642.0
250	12.1	41.7	83.5	125.2	208.7	347.9	626.1
300	10.2	40.8	81.6	122.5	204.1	340.2	612.3
325	9.3	40.3	80.6	120.9	201.6	336.0	604.7
350	8.4	39.8	79.5	119.3	198.8	331.3	596.4
375	7.4	38.9	77.6	116.5	194.1	323.2	581.8
400	6.5	36.5	73.3	109.8	183.1	304.9	548.5
425	5.5	35.2	70.0	105.1	175.1	291.6	524.7
450	4.6	33.7	67.7	101.4	169.0	281.8	507.0
475	3.7	31.7	63.4	95.1	158.2	263.9	474.8
500	2.8	28.2	56.5	84.7	140.9	235.0	423.0
538	1.4	25.2	50.0	75.2	125.5	208.9	375.8
550	1.4(a)	25.0	49.8	74.8	124.9	208.0	374.2
575	1.4(a)	24.0	47.9	71.8	119.7	199.5	359.1
600	1.4(a)	21.6	42.9	64.2	107.0	178.5	321.4
625	1.4(a)	18.3	36.6	54.9	91.2	152.0	273.8
650	1.4(a)	14.1	28.1	42.5	70.7	117.7	211.7
675	1.4(a)	10.3	20.5	30.8	51.3	85.6	154.0
700	1.4(a)	5.6	11.1	16.7	27.8	46.3	83.4
725	1.4(a)	4.0	8.1	12.1	20.1	33.6	60.4
750	1.2(a)	3.0	6.1	9.1	15.1	25.2	45.4
775	0.9(a)	2.5	4.9	7.4	12.4	20.6	37.1
800	0.8(a)	2.2	4.3	6.5	10.8	18.0	32.3
816	0.7(a)	1.9	3.8	5.7	9.5	15.8	28.4

GENERAL NOTE:
(a) Flanged end valve ratings terminate at 538°C.

Table 2-3.6 Ratings for Group 3.6 Materials (Cont'd)

B 163 Gr. N08800 (1)	B 408 Gr. N08800 (1)	B 409 N08800 (1)	B 564 Gr. N08800 (1)

NOTE:
(1) Only use annealed material.

B – Special Class

Temperature, °C	Working Pressures by Class, bar						
	150	300	600	900	1500	2500	4500
−29 to 38	20.0	51.7	103.4	155.1	258.6	430.9	775.7
50	20.0	51.7	103.4	155.1	258.6	430.9	775.7
100	19.5	50.9	101.8	152.7	254.6	424.3	763.7
150	18.8	49.1	98.2	147.3	245.5	409.1	736.4
200	18.3	47.8	95.5	143.3	238.8	398.0	716.5
250	17.9	46.6	93.2	139.8	232.9	388.2	698.8
300	17.5	45.6	91.1	136.7	227.8	379.6	683.4
325	17.2	45.0	90.0	135.0	225.0	375.0	674.9
350	17.0	44.4	88.8	133.1	221.9	369.8	665.6
375	16.8	43.9	87.8	131.6	219.4	365.6	658.1
400	16.6	43.4	86.8	130.1	216.9	361.5	650.7
425	16.4	42.9	85.8	128.6	214.4	357.3	643.2
450	16.2	42.4	84.8	127.1	211.9	353.2	635.7
475	16.1	42.0	84.0	126.1	210.1	350.2	630.3
500	13.7	35.6	71.5	107.1	178.6	297.5	535.4
538	11.0	29.0	57.9	86.9	145.1	241.7	435.1
550	11.0	29.0	57.9	86.9	145.1	241.7	435.1
575	10.9	28.6	57.1	85.7	143.0	238.3	428.8
600	10.3	26.9	53.5	80.4	134.0	223.4	401.9
625	8.7	23.0	45.7	68.6	114.3	190.6	342.8
650	6.9	17.9	35.5	53.1	88.6	147.9	266.1
675	4.9	12.8	25.7	38.5	64.2	107.0	192.5
700	2.7	6.9	13.9	20.8	34.7	57.9	104.2
725	1.9	5.0	10.1	15.1	25.2	42.0	75.5
750	1.4	3.8	7.6	11.3	18.9	31.5	56.7
775	1.2	3.1	6.2	9.3	15.5	25.8	46.4
800	1.0	2.7	5.4	8.1	13.5	22.5	40.4
816	0.9	2.4	4.7	7.1	11.8	19.7	35.5

Table 2-3.7 Ratings for Group 3.7 Materials

B 333 Gr. N10665 (1)	B 335 Gr. N10675 (1)(2)	B 564 Gr. N10665 (1)	B 622 Gr. N10675 (1)
B 333 Gr. N10675 (1)	B 462 Gr. N10665 (1)	B 564 Gr. N10675 (1)	
B 335 Gr. N10665 (1)(2)	B 462 Gr. N10675 (1)	B 622 Gr. N10665 (1)	

NOTES:
(1) Only use solution annealed material.
(2) The chemical composition, mechanical properties, heat treating requirements, and grain size requirements shall conform to the applicable ASTM specification. The manufacturing procedures, tolerances, tests, certification, and markings shall be in accordance with ASTM B 564.

A – Standard Class

Temperature, °C	Working Pressures by Class, bar						
	150	300	600	900	1500	2500	4500
−29 to 38	20.0	51.7	103.4	155.1	258.6	430.9	775.7
50	19.5	51.7	103.4	155.1	258.6	430.9	775.7
100	17.7	51.5	103.0	154.6	257.6	429.4	773.0
150	15.8	50.3	100.3	150.6	250.8	418.2	752.8
200	13.8	48.6	97.2	145.8	243.4	405.4	729.8
250	12.1	46.3	92.7	139.0	231.8	386.2	694.8
300	10.2	42.9	85.7	128.6	214.4	357.1	642.6
325	9.3	41.4	82.6	124.0	206.6	344.3	619.6
350	8.4	40.3	80.4	120.7	201.1	335.3	603.3
375	7.4	38.9	77.6	116.5	194.1	323.2	581.8
400	6.5	36.5	73.3	109.8	183.1	304.9	548.5
425	5.5	35.2	70.0	105.1	175.1	291.6	524.7

B – Special Class

Temperature, °C	Working Pressures by Class, bar						
	150	300	600	900	1500	2500	4500
−29 to 38	20.0	51.7	103.4	155.1	258.6	430.9	775.7
50	20.0	51.7	103.4	155.1	258.6	430.9	775.7
100	20.0	51.7	103.4	155.1	258.6	430.9	775.7
150	20.0	51.7	103.4	155.1	258.6	430.9	775.7
200	20.0	51.7	103.4	155.1	258.6	430.9	775.7
250	20.0	51.7	103.4	155.1	258.6	430.9	775.7
300	20.0	51.7	103.4	155.1	258.6	430.9	775.7
325	20.0	51.7	103.4	155.1	258.6	430.9	775.7
350	19.8	51.5	102.8	154.3	257.1	428.6	771.4
375	19.3	50.6	101.0	151.5	252.5	420.9	757.4
400	19.3	50.3	100.6	150.6	251.2	418.3	753.2
425	19.0	49.6	99.3	148.9	248.2	413.7	744.6

Table 2-3.8 Ratings for Group 3.8 Materials

B 333 Gr. N10001 (1)(2)	B 446 Gr. N06625 (3)(4)	B 564 Gr. N10276 (1)(5)	B 575 Gr. N06455 (1)(2)
B 335 Gr. N10001 (1)(2)(6)	B 462 Gr. N06022 (1)(5)	B 573 Gr. N10003 (3)(6)	B 575 Gr. N10276 (1)(5)
B 423 Gr. N08825 (3)(7)	B 462 Gr. N06200 (1)(2)	B 574 Gr. N06022 (1)(5)(6)	B 622 Gr. N06022 (1)(5)
B 424 Gr. N08825 (3)(7)	B 462 Gr. N10276 (1)(5)	B 574 Gr. N06200 (1)(2)(6)	B 622 Gr. N06200 (1)(2)
B 425 Gr. N08825 (3)(6)(7)	B 564 Gr. N06022 (1)(5)	B 574 Gr. N06455 (1)(2)(6)	B 622 Gr. N06455 (1)(2)
	B 564 Gr. N06200 (1)(2)	B 574 Gr. N10276 (1)(5)(6)	B 622 Gr. N10001 (2)(3)
B 434 Gr. N10003 (3)	B 564 Gr. N06625 (3)(4)	B 575 Gr. N06022 (1)(5)	B 622 Gr. N10276 (1)(5)
B 443 Gr. N06625 (3)(4)	B 564 Gr. N08825 (3)(7)	B 575 Gr. N06200 (1)(2)	

NOTES:
(1) Only use solution annealed material.
(2) Not to be used over 425°C.
(3) Only use annealed material.
(4) Not to be used over 645°C. Alloy N06625 in the annealed condition is subject to severe loss of impact strength at room temperatures after exposure in the range of 538°C to 760°C.
(5) Not to be used over 675°C.
(6) For forgings, the chemical composition, mechanical properties, heat treating requirements, and grain size requirements shall conform to the applicable ASTM specification. The manufacturing procedures, tolerances, tests, certification, and markings shall be in accordance with ASTM B 564.
(7) Not to be used over 538°C.

A – Standard Class

Temperature, °C	Working Pressures by Class, bar						
	150	300	600	900	1500	2500	4500
−29 to 38	20.0	51.7	103.4	155.1	258.6	430.9	775.7
50	19.5	51.7	103.4	155.1	258.6	430.9	775.7
100	17.7	51.5	103.0	154.6	257.6	429.4	773.0
150	15.8	50.3	100.3	150.6	250.8	418.2	752.8
200	13.8	48.3	96.7	145.0	241.7	402.8	725.1
250	12.1	46.3	92.7	139.0	231.8	386.2	694.8
300	10.2	42.9	85.7	128.6	214.4	357.1	642.6
325	9.3	41.4	82.6	124.0	206.6	344.3	619.6
350	8.4	40.3	80.4	120.7	201.1	335.3	603.3
375	7.4	38.9	77.6	116.5	194.1	323.2	581.8
400	6.5	36.5	73.3	109.8	183.1	304.9	548.5
425	5.5	35.2	70.0	105.1	175.1	291.6	524.7
450	4.6	33.7	67.7	101.4	169.0	281.8	507.0
475	3.7	31.7	63.4	95.1	158.2	263.9	474.8
500	2.8	28.2	56.5	84.7	140.9	235.0	423.0
538	1.4	25.2	50.0	75.2	125.5	208.9	375.8
550	1.4(a)	25.0	49.8	74.8	124.9	208.0	374.2
575	1.4(a)	24.0	47.9	71.8	119.7	199.5	359.1
600	1.4(a)	21.6	42.9	64.2	107.0	178.5	321.4
625	1.4(a)	18.3	36.6	54.9	91.2	152.0	273.8
650	1.4(a)	14.1	28.1	42.2	70.4	117.3	211.1
675	1.4(a)	11.5	23.0	34.6	57.6	96.0	172.8
700	1.4(a)	8.8	17.5	26.3	43.8	73.0	131.5

GENERAL NOTE:
(a) Flanged end valve ratings terminate at 538°C.

Table 2-3.8 Ratings for Group 3.8 Materials (Cont'd)

B 333 Gr. N10001 (1)(2)	B 446 Gr. N06625 (3)(4)	B 564 Gr. N10276 (1)(5)	B 575 Gr. N06455 (1)(2)
B 335 Gr. N10001 (1)(2)(6)	B 462 Gr. N06022 (1)(5)	B 573 Gr. N10003 (3)(6)	B 575 Gr. N10276 (1)(5)
B 423 Gr. N08825 (3)(7)	B 462 Gr. N06200 (1)(2)	B 574 Gr. N06022 (1)(5)(6)	B 622 Gr. N06022 (1)(5)
B 424 Gr. N08825 (3)(7)	B 462 Gr. N10276 (1)(5)	B 574 Gr. N06200 (1)(2)(6)	B 622 Gr. N06200 (1)(2)
B 425 Gr. N08825 (3)(6)(7)	B 564 Gr. N06022 (1)(5)	B 574 Gr. N06455 (1)(2)(6)	B 622 Gr. N06455 (1)(2)
	B 564 Gr. N06200 (1)(2)	B 574 Gr. N10276 (1)(5)(6)	B 622 Gr. N10001 (2)(3)
B 434 Gr. N10003 (3)	B 564 Gr. N06625 (3)(4)	B 575 Gr. N06022 (1)(5)	B 622 Gr. N10276 (1)(5)
B 443 Gr. N06625 (3)(4)	B 564 Gr. N08825 (3)(7)	B 575 Gr. N06200 (1)(2)	

NOTES:
(1) Only use solution annealed material.
(2) Not to be used over 425°C.
(3) Only use annealed material.
(4) Not to be used over 645°C. Alloy N06625 in the annealed condition is subject to severe loss of impact strength at room temperatures after exposure in the range of 538°C to 760°C.
(5) Not to be used over 675°C.
(6) For forgings, the chemical composition, mechanical properties, heat treating requirements, and grain size requirements shall conform to the applicable ASTM specification. The manufacturing procedures, tolerances, tests, certification, and markings shall be in accordance with ASTM B 564.
(7) Not to be used over 538°C.

B – Special Class

Temperature °C	Working Pressures by Class, bar						
	150	300	600	900	1500	2500	4500
−29 to 38	20.0	51.7	103.4	155.1	258.6	430.9	775.7
50	20.0	51.7	103.4	155.1	258.6	430.9	775.7
100	20.0	51.7	103.4	155.1	258.6	430.9	775.7
150	20.0	51.7	103.4	155.1	258.6	430.9	775.7
200	20.0	51.7	103.4	155.1	258.6	430.9	775.7
250	19.8	51.7	103.4	155.1	258.6	430.9	775.7
300	19.1	49.9	99.8	149.6	249.4	415.7	748.2
325	18.8	49.1	98.1	147.2	245.3	408.8	735.9
350	18.6	48.4	96.9	145.3	242.2	403.7	726.6
375	18.4	47.9	95.9	143.8	239.7	399.5	719.1
400	18.2	47.5	94.9	142.4	237.3	395.5	711.8
425	18.1	47.3	94.6	141.9	236.4	394.1	709.3
450	17.9	46.8	93.6	140.4	234.1	390.1	702.2
475	16.4	42.8	85.5	128.2	213.7	356.3	641.3
500	13.7	35.6	71.5	107.1	178.6	297.5	535.4
538	11.0	29.0	57.9	86.9	145.1	241.7	435.1
550	11.0	29.0	57.9	86.9	145.1	241.7	435.1
575	10.9	28.6	57.1	85.7	143.0	238.3	428.8
600	10.3	26.9	53.5	80.4	134.0	223.4	401.9
625	8.7	23.0	45.7	68.6	114.3	190.6	342.8
650	6.7	17.6	35.2	52.8	87.9	146.6	263.8
675	5.5	14.4	28.8	43.2	72.0	120.0	215.9
700	4.2	11.0	21.9	32.9	54.8	91.3	164.4

Table 2-3.9 Ratings for Group 3.9 Materials

B 435 Gr. N06002 (1)	B 572 Gr. N06002 (1)(2)	B 622 Gr. N06002 (1)

NOTES:
(1) Only use solution annealed material.
(2) For forgings, the chemical composition, mechanical properties, heat treating requirements, and grain size requirements shall conform to the applicable ASTM specification. The manufacturing procedures, tolerances, tests, certification, and markings shall be in accordance with ASTM B 564.

A – Standard Class

Temperature, °C	Working Pressures by Class, bar						
	150	300	600	900	1500	2500	4500
−29 to 38	20.0	51.7	103.4	155.1	258.6	430.9	775.7
50	19.5	51.7	103.4	155.1	258.6	430.9	775.7
100	17.7	51.5	103.0	154.6	257.6	429.4	773.0
150	15.8	47.6	95.2	142.8	237.9	396.5	713.8
200	13.8	44.3	88.6	132.9	221.5	369.2	664.6
250	12.1	41.6	83.1	124.7	207.9	346.4	623.6
300	10.2	39.5	79.0	118.5	197.4	329.1	592.3
325	9.3	38.6	77.2	115.8	193.0	321.7	579.1
350	8.4	37.9	75.8	113.7	189.5	315.8	568.5
375	7.4	37.3	74.7	112.0	186.6	311.1	559.9
400	6.5	36.5	73.3	109.8	183.1	304.9	548.5
425	5.5	35.2	70.0	105.1	175.1	291.6	524.7
450	4.6	33.7	67.7	101.4	169.0	281.8	507.0
475	3.7	31.7	63.4	95.1	158.2	263.9	474.8
500	2.8	28.2	56.5	84.7	140.9	235.0	423.0
538	1.4	25.2	50.0	75.2	125.5	208.9	375.8
550	1.4(a)	25.0	49.8	74.8	124.9	208.0	374.2
575	1.4(a)	24.0	47.9	71.8	119.7	199.5	359.1
600	1.4(a)	21.6	42.9	64.2	107.0	178.5	321.4
625	1.4(a)	18.3	36.6	54.9	91.2	152.0	273.8
650	1.4(a)	14.1	28.1	42.5	70.7	117.7	211.7
675	1.4(a)	12.4	25.2	37.6	62.7	104.5	187.9
700	1.4(a)	10.1	20.0	29.8	49.7	83.0	149.4
725	1.4(a)	7.9	15.4	23.2	38.6	64.4	115.8
750	1.4(a)	5.9	11.7	17.6	29.6	49.1	88.2
775	1.4(a)	4.6	9.0	13.7	22.8	38.0	68.4
800	1.2(a)	3.5	7.0	10.5	17.4	29.2	52.6
816	1.0(a)	2.8	5.9	8.6	14.1	23.8	42.7

GENERAL NOTE:
(a) Flanged end valve ratings terminate at 538°C.

Table 2-3.9 Ratings for Group 3.9 Materials (Cont'd)

B 435 Gr. N06002 (1)	B 572 Gr. N06002 (1)(2)	B 622 Gr. N06002 (1)

NOTES:
(1) Only use solution annealed material.
(2) For forgings, the chemical composition, mechanical properties, heat treating requirements, and grain size requirements shall conform to the applicable ASTM specification. The manufacturing procedures, tolerances, tests, certification, and markings shall be in accordance with ASTM B 564.

B – Special Class

Temperature, °C	Working Pressures by Class, bar						
	150	300	600	900	1500	2500	4500
−29 to 38	20.0	51.7	103.4	155.1	258.6	430.9	775.7
50	20.0	51.7	103.4	155.1	258.6	430.9	775.7
100	20.0	51.7	103.4	155.1	258.6	430.9	775.7
150	20.0	51.7	103.4	155.1	258.6	430.9	775.7
200	19.0	49.5	98.9	148.4	247.3	412.1	741.8
250	17.8	46.4	92.8	139.2	232.0	386.7	696.0
300	16.9	44.1	88.1	132.2	220.4	367.3	661.1
325	16.5	43.1	86.2	129.3	215.4	359.1	646.3
350	16.2	42.3	84.6	126.9	211.5	352.5	634.5
375	16.0	41.7	83.3	125.0	208.3	347.2	624.9
400	15.8	41.2	82.3	123.5	205.8	343.1	617.5
425	15.7	40.8	81.7	122.5	204.2	340.3	612.5
450	15.5	40.5	81.0	121.5	202.5	337.5	607.6
475	15.4	40.2	80.3	120.5	200.9	334.8	602.6
500	13.7	35.6	71.5	107.1	178.6	297.5	535.4
538	11.0	29.0	57.9	86.9	145.1	241.7	435.1
550	11.0	29.0	57.9	86.9	145.1	241.7	435.1
575	10.9	28.6	57.1	85.7	143.0	238.3	428.8
600	10.3	26.9	53.5	80.4	134.0	223.4	401.9
625	8.7	23.0	45.7	68.6	114.3	190.6	342.8
650	6.9	17.9	35.5	53.1	88.6	147.9	266.1
675	6.2	16.0	31.6	47.3	78.9	131.7	237.0
700	4.8	12.4	25.0	37.3	62.3	103.7	186.5
725	3.7	9.7	19.5	28.9	48.3	80.2	144.5
750	2.8	7.4	14.8	22.1	36.7	61.2	110.3
775	2.2	5.8	11.4	17.2	28.5	47.6	85.6
800	1.8	4.4	8.8	13.2	22.0	36.6	65.6
816	1.4	3.4	7.2	10.7	17.9	29.6	53.1

Table 2-3.10 Ratings for Group 3.10 Materials

B 599 Gr. N08700 (1)	B 672 Gr. N08700 (1)(2)

NOTES:
(1) Only use solution annealed material.
(2) For forgings, the chemical composition, mechanical properties, heat treating requirements, and grain size requirements shall conform to the applicable ASTM specification. The manufacturing procedures, tolerances, tests, certification, and markings shall be in accordance with ASTM B 564.

A – Standard Class

Temperature, °C	Working Pressures by Class, bar						
	150	300	600	900	1500	2500	4500
−29 to 38	20.0	51.7	103.4	155.1	258.6	430.9	775.7
50	19.5	51.7	103.4	155.1	258.6	430.9	775.7
100	17.7	51.5	103.0	154.6	257.6	429.4	772.9
150	15.8	47.1	94.2	141.3	235.5	392.5	706.5
200	13.8	44.3	88.5	132.8	221.3	368.9	664.0
250	12.1	42.8	85.6	128.4	214.0	356.6	641.9
300	10.2	41.3	82.7	124.0	206.7	344.5	620.0
325	9.3	40.4	80.7	121.1	201.8	336.4	605.5
350	8.4	38.9	77.8	116.7	194.5	324.2	583.6

B – Special Class

Temperature, °C	Working Pressures by Class, bar						
	150	300	600	900	1500	2500	4500
−29 to 38	20.0	51.7	103.4	155.1	258.6	430.9	775.7
50	20.0	51.7	103.4	155.1	258.6	430.9	775.7
100	20.0	51.7	103.4	155.1	258.6	430.9	775.7
150	20.0	51.7	103.4	155.1	258.6	430.9	775.7
200	18.9	49.4	98.8	148.2	247.0	411.7	741.1
250	18.3	47.8	95.5	143.3	238.8	398.0	716.4
300	17.7	46.1	92.3	138.4	230.7	384.4	692.0
325	17.3	45.1	90.1	135.2	225.3	375.4	675.8
350	18.6	48.6	97.3	145.9	243.2	405.3	729.6

Table 2-3.11 Ratings for Group 3.11 Materials

B 625 Gr. N08904 (1)	B 649 Gr. N08904 (1)(2)	B 677 Gr. N08904 (1)

NOTES:
(1) Only use annealed material.
(2) For forgings, the chemical composition, mechanical properties, heat treating requirements, and grain size requirements shall conform to the applicable ASTM specification. The manufacturing procedures, tolerances, tests, certification, and markings shall be in accordance with ASTM B 564.

A – Standard Class

Temperature, °C	Working Pressures by Class, bar						
	150	300	600	900	1500	2500	4500
−29 to 38	19.7	51.3	102.6	153.9	256.5	427.5	769.5
50	18.8	49.1	98.3	147.4	245.7	409.6	737.2
100	15.7	41.1	82.1	123.2	205.3	342.1	615.9
150	14.4	37.5	75.0	112.5	187.5	312.5	562.5
200	13.3	34.7	69.3	104.0	173.4	288.9	520.1
250	12.1	32.0	64.0	95.9	159.9	266.5	479.6
300	10.2	30.0	60.0	90.0	150.1	250.1	450.2
325	9.3	29.2	58.5	87.7	146.1	243.6	438.4
350	8.4	28.7	57.3	86.0	143.4	238.9	430.1
375	7.4	28.2	56.5	84.7	141.2	235.4	423.7

B – Special Class

Temperature, °C	Working Pressures by Class, bar						
	150	300	600	900	1500	2500	4500
−29 to 38	20.0	51.7	103.4	155.1	258.6	430.9	775.7
50	19.6	51.1	102.2	153.3	255.5	425.9	766.6
100	17.6	45.8	91.6	137.5	229.1	381.9	687.3
150	16.0	41.9	83.7	125.6	209.3	348.8	627.8
200	14.8	38.7	77.4	116.1	193.5	322.5	580.4
250	13.7	35.7	71.4	107.1	178.4	297.4	535.3
300	12.8	33.5	67.0	100.5	167.5	279.1	502.4
325	12.5	32.6	65.2	97.9	163.1	271.9	489.3
350	12.3	32.0	64.0	96.0	160.0	266.7	480.0
375	13.5	35.3	70.6	105.9	176.5	294.2	529.6

Table 2-3.12 Ratings for Group 3.12 Materials

A 351 Gr. CN3MN(1)	B 582 Gr. N06985 (1)	B 622 Gr. N08320 (1)	B 621 Gr. N08320 (1)(2)
B 462 Gr. N08367(1)	B 622 Gr. N06985 (1)	B 620 Gr. N08320 (1)	B 688 Gr. N08367(1)
B 581 Gr. N06985 (1)(2)			

NOTES:
(1) Only use solution annealed material.
(2) For forgings, the chemical composition, mechanical properties, heat treating requirements, and grain size requirements shall conform to the applicable ASTM specification. The manufacturing procedures, tolerances, tests, certification, and markings shall be in accordance with ASTM B 564.

A – Standard Class

Temperature, °C	Working Pressures by Class, bar						
	150	300	600	900	1500	2500	4500
−29 to 38	17.8	46.3	92.7	139.0	231.7	386.1	695.0
50	17.5	45.6	91.1	136.7	227.8	379.7	683.5
100	16.3	42.5	85.1	127.6	212.7	354.5	638.1
150	15.4	40.1	80.3	120.4	200.7	334.6	602.2
200	13.8	37.3	74.6	112.0	186.6	311.0	559.8
250	12.1	34.9	69.8	104.7	174.5	290.8	523.4
300	10.2	33.1	66.2	99.3	165.5	275.9	496.6
325	9.3	32.3	64.6	97.0	161.6	269.3	484.8
350	8.4	31.6	63.2	94.8	158.1	263.4	474.2
375	7.4	31.0	62.0	93.0	155.1	258.5	465.2
400	6.5	30.4	60.8	91.3	152.1	253.5	456.3
425	5.5	29.8	59.7	89.5	149.1	248.5	447.4

B – Special Class

Temperature, °C	Working Pressures by Class, bar						
	150	300	600	900	1500	2500	4500
−29 to 38	19.8	51.7	103.4	155.1	258.6	430.9	775.7
50	19.5	50.9	101.7	152.6	254.3	423.8	762.9
100	18.2	47.5	95.0	142.4	237.4	395.6	712.2
150	17.2	44.8	89.6	134.4	224.0	373.4	672.1
200	16.0	41.6	83.3	124.9	208.2	347.1	624.7
250	14.9	38.9	77.9	116.8	194.7	324.5	584.2
300	14.2	37.0	73.9	110.9	184.8	307.9	554.3
325	13.8	36.1	72.1	108.2	180.3	300.6	541.0
350	13.5	35.3	70.6	105.8	176.4	294.0	529.2
375	13.3	34.6	69.2	103.8	173.1	288.5	519.2
400	13.0	34.0	67.9	101.9	169.8	282.9	509.3
425	12.8	33.3	66.6	99.9	166.4	277.4	499.3

Table 2-3.13 Ratings for Group 3.13 Materials

B 564 Gr. N08031 (1)	B 581 Gr. N06975 (2)(3)	B 582 Gr. N06975 (2)	B 622 Gr. N06975 (2)
B 625 Gr. N08031 (1)	B 622 Gr. N08031 (1)	B 649 Gr. N08031 (1)(3)	

NOTES:
(1) Only use annealed material.
(2) Only use solution annealed material.
(3) For forgings, the chemical composition, mechanical properties, heat treating requirements, and grain size requirements shall conform to the applicable ASTM specification. The manufacturing procedures, tolerances, tests, certification, and markings shall be in accordance with ASTM B 564.

A – Standard Class

Temperature, °C	Working Pressures by Class, bar						
	150	300	600	900	1500	2500	4500
−29 to 38	20.0	51.7	103.4	155.1	258.6	430.9	775.7
50	19.5	51.7	103.4	155.1	258.6	430.9	775.7
100	17.7	48.2	96.3	144.5	240.8	401.4	722.5
150	15.8	45.8	91.6	137.4	228.9	381.6	686.8
200	13.8	43.6	87.1	130.7	217.8	362.9	653.3
250	12.1	41.5	82.9	124.4	207.3	345.5	621.8
300	10.2	39.4	78.7	118.1	196.8	328.1	590.5
325	9.3	38.4	76.9	115.3	192.2	320.3	576.6
350	8.4	37.7	75.5	113.2	188.7	314.5	566.0
375	7.4	37.2	74.3	111.5	185.8	309.7	557.4
400	6.5	36.5	73.3	109.8	183.1	304.9	548.5
425	5.5	35.2	70.0	105.1	175.1	291.6	524.7

B – Special Class

Temperature, °C	Working Pressures by Class, bar						
	150	300	600	900	1500	2500	4500
−29 to 38	20.0	51.7	103.4	155.1	258.6	430.9	775.7
50	20.0	51.7	103.4	155.1	258.6	430.9	775.7
100	20.0	51.7	103.4	155.1	258.6	430.9	775.7
150	19.6	51.1	102.2	153.3	255.5	425.8	766.5
200	18.6	48.6	97.2	145.8	243.0	405.1	729.1
250	17.7	46.3	92.5	138.8	231.3	385.6	694.0
300	16.8	43.9	87.9	131.8	219.7	366.2	659.1
325	16.4	42.9	85.8	128.7	214.5	357.5	643.5
350	16.1	42.1	84.2	126.3	210.6	351.0	631.7
375	15.9	41.5	83.0	124.4	207.4	345.6	622.1
400	15.7	41.0	82.0	123.0	204.9	341.5	614.8
425	15.6	40.7	81.3	122.0	203.3	338.8	609.8

Table 2-3.14 Ratings for Group 3.14 Materials

B 462 Gr. N06030(1)(2)	B 581 Gr. N06030(1)(2)(3)	B 582 Gr. N06030(1)(2)	B 622 Gr. N06030(1)(2)
B 581 Gr. N06007(1)(3)	B 582 Gr. N06007(1)	B 622 Gr. N06007(1)	

NOTES:

(1) Only use solution annealed material.

(2) Not to be used over 425°C.

(3) For forgings, the chemical composition, mechanical properties, heat treating requirements, and grain size requirements shall conform to the applicable ASTM specification. The manufacturing procedures, tolerances, tests, certification, and markings shall be in accordance with ASTM B 564.

A – Standard Class

Temperature, °C	Working Pressures by Class, bar						
	150	300	600	900	1500	2500	4500
−29 to 38	19.0	49.6	99.3	148.9	248.2	413.7	744.6
50	18.6	48.6	97.1	145.7	242.8	404.6	728.3
100	17.0	44.3	88.6	132.8	221.4	369.0	664.2
150	15.8	41.3	82.6	124.0	206.6	344.3	619.8
200	13.8	39.1	78.2	117.3	195.4	325.7	586.3
250	12.1	37.4	74.8	112.2	187.0	311.6	560.9
300	10.2	36.1	72.2	108.3	180.6	300.9	541.7
325	9.3	35.6	71.1	106.7	177.9	296.4	533.6
350	8.4	35.2	70.3	105.5	175.8	293.1	527.5
375	7.4	34.9	69.7	104.6	174.3	290.6	523.0
400	6.5	34.6	69.2	103.7	172.9	288.1	518.7
425	5.5	34.4	68.9	103.3	172.1	286.9	516.4
450	4.6	33.7	67.7	101.4	169.0	281.8	507.0
475	3.7	31.7	63.4	95.1	158.2	263.9	474.8
500	2.8	28.2	56.5	84.7	140.9	235.0	423.0
538	1.4	25.2	50.0	75.2	125.5	208.9	375.8

B – Special Class

Temperature, °C	Working Pressures by Class, bar						
	150	300	600	900	1500	2500	4500
−29 to 38	20.0	51.7	103.4	155.1	258.6	430.9	775.7
50	20.0	51.7	103.4	155.1	258.6	430.9	775.7
100	18.9	49.4	98.8	148.3	247.1	411.8	741.3
150	17.7	46.1	92.2	138.3	230.6	384.3	691.7
200	16.7	43.6	87.2	130.9	218.1	363.5	654.3
250	16.0	41.7	83.5	125.2	208.7	347.8	626.0
300	15.5	40.3	80.6	120.9	201.5	335.9	604.6
325	15.2	39.7	79.4	119.1	198.5	330.9	595.5
350	15.0	39.2	78.5	117.7	196.2	327.1	588.7
375	14.9	38.9	77.8	116.7	194.6	324.3	583.7
400	14.8	38.6	77.2	115.8	193.0	321.6	578.9
425	14.7	38.4	76.8	115.3	192.1	320.2	576.4
450	14.7	38.3	76.5	114.8	191.3	318.8	573.9
475	14.6	38.1	76.2	114.3	190.5	317.4	571.4
500	13.7	35.6	71.5	107.1	178.6	297.5	535.4
538	11.0	29.0	57.9	86.9	145.1	241.7	435.1

Table 2-3.15 Ratings for Group 3.15 Materials

A 494 Gr. N-12MV (1)(2)	B 407 Gr. N08810 (1)	B 409 Gr. N08810 (1)	B 564 Gr. N08810 (1)
A 494 Gr. CW-12MW (1)(2)	B 408 Gr. N08810 (1)(3)		

NOTES:
(1) Only use solution annealed material.
(2) Not to be used over 538°C.
(3) For forgings, the chemical composition, mechanical properties, heat treating requirements, and grain size requirements shall conform to the applicable ASTM specification. The manufacturing procedures, tolerances, tests, certification, and markings shall be in accordance with ASTM B 564.

A – Standard Class

Temperature, °C	Working Pressures by Class, bar						
	150	300	600	900	1500	2500	4500
−29 to 38	15.9	41.4	82.7	124.1	206.8	344.7	620.5
50	15.6	40.6	81.3	121.9	203.2	338.7	609.6
100	14.5	37.8	75.6	113.4	189.0	315.0	567.0
150	13.7	35.9	71.7	107.6	179.3	298.9	538.0
200	13.0	33.9	67.9	101.8	169.6	282.7	508.9
250	12.1	32.3	64.5	96.8	161.3	268.9	484.0
300	10.2	30.7	61.5	92.2	153.7	256.2	461.2
325	9.3	30.1	60.1	90.2	150.3	250.5	450.9
350	8.4	29.4	58.8	88.3	147.1	245.2	441.3
375	7.4	28.7	57.4	86.2	143.6	239.4	430.8
400	6.5	28.3	56.5	84.8	141.3	235.6	424.0
425	5.5	27.7	55.3	83.0	138.4	230.6	415.1
450	4.6	27.2	54.4	81.7	136.1	226.8	408.3
475	3.7	26.8	53.5	80.3	133.9	223.1	401.6
500	2.8	26.3	52.6	79.0	131.6	219.4	394.9
538	1.4	25.2	50.0	75.2	125.5	208.9	375.8
550	1.4(a)	25.0	49.8	74.8	124.9	208.0	374.2
575	1.4(a)	24.0	47.9	71.8	119.7	199.5	359.1
600	1.4(a)	21.6	42.9	64.2	107.0	178.5	321.4
625	1.4(a)	18.3	36.6	54.9	91.2	152.0	273.8
650	1.4(a)	14.1	28.1	42.5	70.7	117.7	211.7
675	1.4(a)	12.4	25.2	37.6	62.7	104.5	187.9
700	1.4(a)	10.1	20.0	29.8	49.7	83.0	149.4
725	1.4(a)	7.9	15.4	23.2	38.6	64.4	115.8
750	1.4(a)	5.9	11.7	17.6	29.6	49.1	88.2
775	1.4(a)	4.6	9.0	13.7	22.8	38.0	68.4
800	1.2(a)	3.5	7.0	10.5	17.4	29.2	52.6
816	1.0(a)	2.8	5.9	8.6	14.1	23.8	42.7

GENERAL NOTE:
(a) Flanged end valve ratings terminate at 538°C.

Table 2-3.15 Ratings for Group 3.15 Materials (Cont'd)

A 494 Gr. N-12MV (1)(2)	B 407 Gr. N08810 (1)	B 409 Gr. N08810 (1)	B 564 Gr. N08810 (1)
A 494 Gr. CW-12MV (1)(2)	B 408 Gr. N08810 (1)(3)		

NOTES:
(1) Only use solution annealed material.
(2) Not to be used over 538°C.
(3) For forgings, the chemical composition, mechanical properties, heat treating requirements, and grain size trequirements shall conform to the applicable ASTM specification. The manufacturing procedures, tolerances, tests, certification, and markings shall be in accordance with ASTM B 564.

B – Special Class

Temperature, °C	Working Pressures by Class, bar						
	150	300	600	900	1500	2500	4500
−29 to 38	17.7	46.2	92.3	138.5	230.9	384.8	692.6
50	17.4	45.4	90.7	136.1	226.8	378.0	680.4
100	16.2	42.2	84.4	126.6	210.9	351.6	632.8
150	15.3	40.0	80.1	120.1	200.1	333.6	600.4
200	14.5	37.9	75.7	113.6	189.3	315.6	568.0
250	13.8	36.0	72.0	108.0	180.0	300.1	540.1
300	13.2	34.3	68.6	102.9	171.6	285.9	514.7
325	12.9	33.5	67.1	100.6	167.7	279.5	503.2
350	12.6	32.8	65.7	98.5	164.2	273.6	492.5
375	12.3	32.1	64.1	96.2	160.3	267.1	480.9
400	12.1	31.6	63.1	94.7	157.8	262.9	473.3
425	11.8	30.9	61.8	92.7	154.4	257.4	463.3
450	11.6	30.4	60.8	91.1	151.9	253.1	455.6
475	11.5	29.9	59.8	89.6	149.4	249.0	448.2
500	11.3	29.4	58.8	88.1	146.9	244.8	440.7
538	11.0	28.6	57.3	85.9	143.1	238.5	429.4
550	11.0	28.6	57.3	85.9	143.1	238.5	429.4
575	10.9	28.6	57.1	85.7	143.0	238.3	428.8
600	10.3	26.9	53.5	80.4	134.0	223.4	401.9
625	8.7	23.0	45.7	68.6	114.3	190.6	342.8
650	6.9	17.9	35.5	53.1	88.6	147.9	266.1
675	6.2	16.0	31.6	47.3	78.9	131.7	237.0
700	4.8	12.4	25.0	37.3	62.3	103.7	186.5
725	3.7	9.7	19.5	28.9	48.3	80.2	144.5
750	2.8	7.4	14.8	22.1	36.7	61.2	110.3
775	2.2	5.8	11.4	17.2	28.5	47.6	85.6
800	1.8	4.4	8.8	13.2	22.0	36.6	65.6
816	1.4	3.4	7.2	10.7	17.9	29.6	53.1

Table 2-3.16 Ratings for Group 3.16 Materials

B 511 Gr. N08330 (1)(2)	B 535 Gr. N08330 (1)	B 536 Gr. N08330 (1)

NOTES:
(1) Only use solution annealed material.
(2) For forgings, the chemical composition, mechanical properties, heat treating requirements, and grain size requirements shall conform to the applicable ASTM specification. The manufacturing procedures, tolerances, tests, certification, and markings shall be in accordance with ASTM B 564.

A – Standard Class

Temperature, °C	Working Pressures by Class, bar						
	150	300	600	900	1500	2500	4500
−29 to 38	19.0	49.6	99.3	148.9	248.2	413.7	744.6
50	18.5	48.4	96.7	145.1	241.8	403.1	725.5
100	16.7	43.5	87.0	130.5	217.5	362.4	652.4
150	15.6	40.8	81.6	122.5	204.1	340.2	612.3
200	13.8	38.6	77.2	115.8	192.9	321.6	578.8
250	12.1	36.8	73.5	110.3	183.8	306.3	551.4
300	10.2	35.2	70.4	105.6	176.1	293.4	528.2
325	9.3	34.5	69.0	103.6	172.6	287.7	517.9
350	8.4	33.9	67.8	101.7	169.4	282.4	508.3
375	7.4	33.2	66.3	99.5	165.8	276.4	497.5
400	6.5	32.6	65.1	97.7	162.9	271.4	488.6
425	5.5	32.0	64.0	95.9	159.9	266.5	479.6
450	4.6	31.4	62.8	94.1	156.9	261.5	470.7
475	3.7	30.8	61.6	92.4	153.9	256.5	461.8
500	2.8	28.2	56.5	84.7	140.9	235.0	423.0
538	1.4	25.2	50.0	75.2	125.5	208.9	375.8
550	1.4(a)	25.0	49.8	74.8	124.9	208.0	374.2
575	1.4(a)	21.9	43.7	65.6	109.4	182.3	328.1
600	1.4(a)	17.4	34.8	52.3	87.1	145.1	261.3
625	1.4(a)	13.8	27.5	41.3	68.8	114.6	206.3
650	1.4(a)	11.0	22.1	33.1	55.1	91.9	165.4
675	1.4(a)	9.1	18.2	27.3	45.6	75.9	136.7
700	1.4(a)	7.6	15.2	22.8	38.0	63.3	113.9
725	1.4(a)	6.1	12.2	18.3	30.5	50.9	91.6
750	1.4(a)	4.8	9.5	14.3	23.8	39.7	71.5
775	1.4(a)	3.9	7.7	11.6	19.4	32.3	58.1
800	1.2(a)	3.1	6.3	9.4	15.6	26.1	46.9
816	1.0(a)	2.6	5.2	7.8	13.0	21.7	39.0

GENERAL NOTE:
(a) Flanged end valve ratings terminate at 538°C.

Table 2-3.16 Ratings for Group 3.16 Materials (Cont'd)

B 511 Gr. N08330 (1)(2)	B 535 Gr. N08330 (1)	B 536 Gr. N08330 (1)

NOTES:
(1) Only use solution annealed material.
(2) For forgings, the chemical composition, mechanical properties, heat treating requirements, and grain size requirements shall conform to the applicable ASTM specification. The manufacturing procedures, tolerances, tests, certification, and markings shall be in accordance with ASTM B 564.

B – Special Class

Temperature, °C	Working Pressures by Class, bar						
	150	300	600	900	1500	2500	4500
−29 to 38	19.8	51.7	103.4	155.1	258.6	430.9	775.7
50	19.6	51.1	102.2	153.3	255.5	425.8	766.5
100	18.6	48.5	97.1	145.6	242.7	404.5	728.1
150	17.5	45.6	91.1	136.7	227.8	379.7	683.4
200	16.5	43.1	86.1	129.2	215.3	358.9	646.0
250	15.7	41.0	82.1	123.1	205.1	341.9	615.4
300	15.1	39.3	78.6	117.9	196.5	327.5	589.5
325	14.8	38.5	77.1	115.6	192.7	321.1	578.0
350	14.5	37.8	75.6	113.5	189.1	315.2	567.3
375	14.2	37.0	74.0	111.1	185.1	308.5	555.3
400	13.9	36.4	72.7	109.1	181.8	302.9	545.3
425	13.7	35.7	71.4	107.1	178.4	297.4	535.3
450	13.4	35.0	70.0	105.1	175.1	291.9	525.3
475	13.2	34.4	68.7	103.1	171.8	286.3	515.4
500	13.0	33.8	67.6	101.4	169.1	281.8	507.2
538	11.0	29.0	57.9	86.9	145.1	241.7	435.1
550	11.0	29.0	57.9	86.9	145.1	241.7	435.1
575	10.5	27.3	54.7	82.0	136.7	227.8	410.1
600	8.3	21.8	43.5	65.3	108.9	181.4	326.6
625	6.6	17.2	34.4	51.6	86.0	143.3	257.9
650	5.3	13.8	27.6	41.3	68.9	114.8	206.7
675	4.4	11.4	22.8	34.2	56.9	94.9	170.8
700	3.6	9.5	19.0	28.5	47.5	79.1	142.4
725	2.9	7.6	15.3	22.9	38.1	63.6	114.4
750	2.3	6.0	11.9	17.9	29.8	49.6	89.4
775	1.9	4.8	9.7	14.5	24.2	40.3	72.6
800	1.5	3.9	7.8	11.7	19.6	32.6	58.7
816	1.2	3.3	6.5	9.8	16.3	27.1	48.8

Table 2-3.17 Ratings for Group 3.17 Materials

A 351 Gr. CN7M (1)

NOTE:
(1) Only use solution annealed material.

A – Standard Class

Temperature, °C	Working Pressures by Class, bar						
	150	300	600	900	1500	2500	4500
−29 to 38	15.9	41.4	82.7	124.1	206.8	344.7	620.5
50	15.4	40.1	80.3	120.4	200.7	334.4	602.0
100	13.5	35.3	70.6	105.9	176.5	294.2	529.6
150	12.3	32.0	64.1	96.1	160.2	267.0	480.6
200	11.3	29.4	58.7	88.1	146.8	244.7	440.4
250	10.4	27.2	54.4	81.7	136.1	226.9	408.4
300	9.7	25.4	50.8	76.1	126.9	211.5	380.7
325	9.3	24.4	48.8	73.3	122.1	203.5	366.4

B – Special Class

Temperature, °C	Working Pressures by Class, bar						
	150	300	600	900	1500	2500	4500
−29 to 38	17.6	45.8	91.6	137.4	229.0	381.7	687.0
50	17.0	44.2	88.5	132.7	221.2	368.7	663.6
100	14.7	38.3	76.6	114.9	191.5	319.1	574.4
150	13.5	35.2	70.4	105.5	175.9	293.2	527.7
200	12.5	32.7	65.4	98.2	163.6	272.7	490.8
250	11.6	30.4	60.8	91.2	151.9	253.2	455.8
300	10.9	28.3	56.6	85.0	141.6	236.0	424.8
325	11.7	30.5	61.1	91.6	152.6	254.4	457.9

Table 2-3.18 Ratings for Group 3.18 Materials

B 167 Gr. N06600 (1)

NOTE:
(1) Only use annealed material.

A – Standard Class

Temperature, °C	Working Pressures by Class, bar						
	150	300	600	900	1500	2500	4500
−29 to 38	19.0	49.6	99.3	148.9	248.2	413.7	744.6
50	18.8	49.1	98.3	147.4	245.7	409.4	737.0
100	17.7	47.1	94.2	141.3	235.4	392.4	706.3
150	15.8	45.3	90.6	135.9	226.5	377.5	679.5
200	14.0	43.5	87.0	130.5	217.6	362.6	652.7
250	12.1	42.0	84.0	126.0	210.0	350.0	630.0
300	10.2	40.6	81.3	121.9	203.1	338.6	609.4
325	9.1	40.0	80.0	120.0	199.9	333.2	599.8
350	8.4	39.4	78.8	118.2	196.9	328.2	590.8
375	7.4	38.8	77.6	116.4	194.0	323.4	582.1
400	6.5	36.6	73.2	109.8	182.9	304.9	548.8
425	5.6	35.1	70.2	105.3	175.5	292.5	526.4
450	4.7	33.8	67.6	101.4	169.0	281.7	507.1
475	3.7	31.7	63.3	95.0	158.3	263.8	474.8
500	2.8	28.2	56.4	84.6	141.0	235.1	423.1
538	1.4	16.5	33.1	49.6	82.7	137.9	248.2
550	1.3(a)	13.9	27.9	41.8	69.7	116.2	209.2
575	1.3(a)	9.4	18.9	28.3	47.2	78.6	141.5
600	1.3(a)	6.6	13.3	19.9	33.2	55.3	99.6
625	1.3(a)	5.1	10.3	15.4	25.7	42.8	77.0
650	1.3(a)	4.7	9.5	14.2	23.6	39.4	70.9

GENERAL NOTE:
(a) Flanged end valve ratings terminate at 538°C.

B – Special Class

Temperature, °C	Working Pressures by Class, bar						
	150	300	600	900	1500	2500	4500
−29 to 38	20.0	51.7	103.5	155.2	258.6	431.1	775.9
50	20.0	51.7	103.5	155.2	258.6	431.1	775.9
100	20.0	51.7	103.5	155.2	258.6	431.1	775.9
150	19.4	50.6	101.1	151.7	252.8	421.3	758.4
200	18.6	48.6	97.1	145.7	242.8	404.7	728.5
250	18.0	46.9	93.7	140.6	234.4	390.6	703.1
300	17.4	45.3	90.7	136.0	226.7	377.9	680.1
325	17.1	44.6	89.3	133.9	223.1	371.9	669.4
350	16.9	44.0	87.9	131.9	201.2	366.3	659.4
375	16.6	43.3	86.6	130.0	194.0	361.0	649.8
400	16.4	42.8	85.6	128.5	182.9	356.9	642.4
425	16.2	42.3	84.7	127.0	175.5	352.7	634.9
450	16.0	41.8	83.7	125.5	169.0	348.6	627.4
475	15.8	41.3	82.7	124.0	158.3	344.4	619.9
500	13.4	34.9	69.7	104.6	141.0	290.6	523.1
538	7.9	20.7	41.4	62.1	103.4	172.4	310.3
550	6.7	17.4	34.9	52.3	87.2	145.3	261.5
575	4.5	11.8	23.6	35.4	59.0	98.3	176.9
600	3.2	8.3	16.6	24.9	41.5	69.1	124.5
625	2.5	6.4	12.8	19.3	32.1	53.5	96.3
650	2.3	5.9	11.8	17.7	29.5	49.2	88.6

Table 3-A Valve Body Minimum Wall Thickness, t_m, mm

Inside Dia. d, mm [Note (1)]	Minimum Wall Thickness — t_m, mm						
	Class 150	Class 300	Class 600	Class 900	Class 1500	Class 2500	Class 4500
3	2.5	2.5	2.8	2.8	3.1	3.6	4.9
6	2.7	2.7	3.0	3.1	3.5	4.2	6.5
9	2.8	2.9	3.2	3.4	3.8	4.9	8.0
12	2.9	3.0	3.4	3.7	4.2	5.6	9.6
15	3.1	3.3	3.6	4.2	4.8	6.6	12.0
18	3.3	3.5	3.9	4.7	5.3	7.7	14.3
21	3.5	3.7	4.2	5.2	5.9	8.7	16.7
24	3.7	4.0	4.4	5.7	6.4	9.7	19.0
27	3.9	4.3	4.8	6.3	7.2	11.1	22.2
31	4.3	4.7	5.1	6.6	8.1	12.8	26.1
35	4.6	5.1	5.4	6.9	9.0	14.5	30.0
40	4.9	5.5	5.7	7.2	9.9	16.2	33.9
45	5.2	5.9	6.0	7.5	10.8	17.9	37.9
50	5.5	6.3	6.3	7.8	11.8	19.6	41.8
55	5.6	6.5	6.3	8.3	12.7	21.3	45.7
60	5.7	6.6	6.6	8.8	13.6	23.0	49.6
65	5.8	6.8	6.9	9.3	14.5	24.7	53.6
70	5.9	6.9	7.3	9.9	15.5	26.4	57.5
75	6.0	7.1	7.6	10.4	16.4	28.1	61.4
80	6.1	7.2	8.0	10.9	17.3	29.8	65.3
85	6.2	7.4	8.3	11.4	18.2	31.5	69.3
90	6.3	7.5	8.6	11.9	19.1	33.2	73.2
95	6.4	7.7	9.0	12.5	20.1	34.9	77.1
100	6.5	7.8	9.3	13.0	21.0	36.6	81.0
110	6.5	8.0	10.0	14.0	22.8	40.0	88.9
120	6.7	8.3	10.7	15.1	24.7	43.4	96.7
130	6.8	8.7	11.4	16.1	26.5	46.9	104.6
140	7.0	9.0	12.0	17.2	28.4	50.3	112.4
150	7.1	9.3	12.7	18.2	30.2	53.7	120.3
160	7.3	9.7	13.4	19.3	32.0	57.1	128.1
170	7.5	10.0	14.1	20.3	33.9	60.5	136.0
180	7.6	10.3	14.7	21.3	35.7	63.9	143.8
190	7.8	10.7	15.4	22.4	37.6	67.3	151.7
200	8.0	11.0	16.1	23.4	39.4	70.7	159.5
210	8.1	11.3	16.8	24.5	41.3	74.1	167.4
220	8.3	11.7	17.4	25.5	43.1	77.5	175.2
230	8.4	12.0	18.1	26.6	45.0	80.9	183.1
240	8.6	12.3	18.8	27.6	46.8	84.4	190.9
250	8.8	12.7	19.5	28.7	48.6	87.8	198.8
260	8.9	13.0	20.2	29.7	50.5	91.2	206.6
270	9.1	13.3	20.8	30.8	52.3	94.6	214.5
280	9.3	13.7	21.5	31.8	54.2	98.0	222.3
290	9.4	14.0	22.2	32.8	56.0	101.4	230.2
300	9.6	14.3	22.9	33.9	57.9	104.8	238.0
310	9.8	14.7	23.5	34.9	59.7	108.2	245.9

Table 3-A Valve Body Minimum Wall Thickness, t_m, mm (Cont'd)

Inside Dia. d, mm [Note (1)]	Minimum Wall Thickness — t_m, mm						
	Class 150	Class 300	Class 600	Class 900	Class 1500	Class 2500	Class 4500
320	9.9	15.0	24.2	36.0	61.6	111.6	253.7
330	10.1	15.3	24.9	37.0	63.4	115.0	261.6
340	10.2	15.7	25.6	38.1	65.2	118.4	269.4
350	10.4	16.0	26.3	39.1	67.1	121.9	277.2
360	10.6	16.3	26.9	40.2	68.9	125.3	285.1
370	10.7	16.7	27.6	41.2	70.8	128.7	292.9
380	10.9	17.0	28.3	42.2	72.6	132.1	300.8
390	11.1	17.3	29.0	43.3	74.5	135.5	308.6
400	11.2	17.7	29.6	44.3	76.3	138.9	316.5
410	11.4	18.0	30.3	45.4	78.2	142.3	324.3
420	11.5	18.3	31.0	46.4	80.0	145.7	332.2
430	11.7	18.7	31.7	47.5	81.8	149.1	340.0
440	11.9	19.0	32.4	48.5	83.7	152.5	347.9
450	12.0	19.4	33.0	49.6	85.5	155.9	355.7
460	12.2	19.7	33.7	50.6	87.4	159.4	363.6
470	12.4	20.0	34.4	51.7	89.2	162.8	371.4
480	12.5	20.4	35.1	52.1	91.1	166.2	379.3
490	12.7	20.7	35.7	53.7	92.9	169.6	387.1
500	12.9	21.0	36.4	54.8	94.8	173.0	395.0
510	13.0	21.4	37.1	55.8	96.6	176.4	402.8
520	13.2	21.7	37.8	56.9	98.4	179.8	410.7
530	13.3	22.0	38.5	57.9	100.3	183.2	418.5
540	13.5	22.4	39.1	59.0	102.1	186.6	426.4
550	13.7	22.7	39.8	60.0	104.0	190.0	434.2
560	13.8	23.0	40.5	61.1	105.8	193.4	442.1
570	14.0	23.4	41.2	62.1	107.7	196.9	449.9
580	14.2	23.7	41.8	63.1	109.5	200.3	457.8
590	14.3	24.0	42.5	64.2	111.4	203.7	465.6
600	14.5	24.4	43.2	65.2	113.2	207.1	473.5
610	14.6	24.7	43.9	66.3	115.0	210.5	481.3
620	14.8	25.0	44.6	67.3	116.9	213.9	489.2
630	15.0	25.4	45.2	68.4	118.7	217.3	497.0
640	15.1	25.7	45.9	69.4	120.6	220.7	504.9
650	15.3	26.0	46.6	70.5	122.4	224.1	512.7
660	15.5	26.4	47.3	71.5	124.3	227.5	520.6
670	15.6	26.7	41.9	72.5	126.1	230.9	528.4
680	15.8	27.0	48.6	73.6	128.0	234.4	536.3
690	15.9	27.4	49.3	74.6	129.8	237.8	544.1
700	16.1	27.7	50.0	75.7	131.6	241.2	552.0
710	16.3	28.0	50.7	76.1	133.5	244.6	559.8
720	16.4	28.4	51.3	77.8	135.3	248.0	567.7
730	16.6	28.7	52.0	78.8	137.2	251.4	575.5
740	16.8	29.0	52.7	79.9	139.0	254.8	583.4
750	16.9	29.4	53.4	80.9	140.9	258.2	591.2
760	17.1	29.7	54.0	82.0	142.7	261.6	599.0

Table 3-A Valve Body Minimum Wall Thickness, t_m, mm (Cont'd)

Inside Dia. d, mm [Note (1)]	Minimum Wall Thickness — t_m, mm						
	Class 150	Class 300	Class 600	Class 900	Class 1500	Class 2500	Class 4500
770	17.3	30.0	54.7	83.0	144.6	265.0	606.9
780	17.4	30.4	55.4	84.0	146.4	268.4	614.7
790	17.6	30.7	56.1	85.1	148.2	271.9	622.6
800	17.7	31.0	56.8	86.1	150.1	275.3	630.4
820	18.1	31.7	58.1	88.2	153.8	282.1	646.1
840	18.4	32.4	59.5	90.3	157.5	288.9	661.8
860	18.7	33.0	60.8	92.4	161.1	295.7	677.5
880	19.0	33.7	62.2	94.5	164.8	302.5	693.2
900	19.4	34.4	63.5	96.6	168.5	309.4	708.9
920	19.7	35.0	64.9	98.7	172.2	316.2	724.6
940	20.0	35.7	66.2	100.8	175.9	323.0	740.3
960	20.3	36.4	67.6	102.9	179.6	329.6	756.0
980	20.7	37.1	69.0	104.9	183.3	336.6	771.7
1000	21.0	37.7	70.3	107.0	187.0	343.5	787.4
1020	21.3	38.4	71.7	109.1	190.7	350.3	803.1
1040	21.7	39.1	73.0	111.2	194.3	357.1	818.8
1060	22.0	39.7	74.4	113.3	198.0	363.9	834.5
1080	22.3	40.4	75.7	115.4	201.7	370.7	850.2
1100	22.6	41.1	77.1	117.5	205.4	377.5	865.9
1120	23.0	41.7	78.4	119.6	209.1	384.4	881.6
1140	23.3	42.4	79.8	121.7	212.8	391.2	897.3
1160	23.6	43.1	81.2	123.7	216.5	398.0	913.0
1180	23.9	43.7	82.5	125.8	220.2	404.8	928.7
1200	24.3	44.4	83.9	127.9	223.9	411.6	944.4
1220	24.6	45.1	85.2	130.0	227.5	418.5	960.1
1240	24.9	45.7	86.6	132.1	231.2	425.3	975.8
1260	25.2	46.4	87.9	134.2	234.9	432.1	991.5
1280	25.6	41.1	89.3	136.3	238.6	438.9	1007.2
1300	25.9	47.7	90.6	138.4	242.3	445.7	1022.9

NOTE: (1) See para. 6.1.2.

Table 3-B Valve Body Minimum Wall Thickness, t_m, in.

Inside Dia. d, in. [Note (1)]	Minimum Wall Thickness — t_m, in.						
	Class 150	Class 300	Class 600	Class 900	Class 1500	Class 2500	Class 4500
0.12	0.10	0.10	0.11	0.11	0.12	0.14	0.19
0.25	0.11	0.11	0.12	0.13	0.15	0.19	0.30
0.37	0.12	0.12	0.13	0.15	0.17	0.23	0.39
0.44	0.12	0.13	0.14	0.16	0.18	0.25	0.45
0.50	0.12	0.13	0.15	0.17	0.19	0.27	0.49
0.56	0.13	0.13	0.15	0.18	0.20	0.29	0.54
0.62	0.13	0.14	0.16	0.19	0.21	0.31	0.59
0.69	0.14	0.15	0.16	0.20	0.23	0.34	0.64
0.75	0.14	0.15	0.17	0.21	0.24	0.36	0.69
0.87	0.15	0.16	0.18	0.23	0.26	0.40	0.78
1.00	0.16	0.17	0.19	0.25	0.28	0.44	0.88
1.12	0.16	0.18	0.20	0.26	0.31	0.48	0.98
1.25	0.17	0.19	0.21	0.27	0.33	0.53	1.08
1.37	0.18	0.20	0.21	0.27	0.35	0.57	1.18
1.50	0.19	0.21	0.22	0.28	0.38	0.61	1.28
1.87	0.21	0.24	0.24	0.30	0.44	0.74	1.57
2.00	0.22	0.25	0.25	0.31	0.47	0.78	1.67
2.25	0.23	0.26	0.25	0.34	0.51	0.87	1.87
2.50	0.23	0.27	0.27	0.36	0.56	0.95	2.06
2.75	0.24	0.27	0.29	0.39	0.61	1.04	2.26
2.87	0.24	0.28	0.29	0.40	0.63	1.08	2.35
3.00	0.24	0.28	0.30	0.41	0.65	1.12	2.45
3.50	0.25	0.30	0.34	0.47	0.75	1.29	2.85
3.62	0.25	0.30	0.35	0.48	0.77	1.33	2.94
3.87	0.26	0.31	0.36	0.50	0.81	1.42	3.14
4.00	0.26	0.31	0.37	0.52	0.84	1.46	3.24
4.37	0.26	0.32	0.40	0.56	0.91	1.59	3.53
4.75	0.26	0.33	0.42	0.60	0.96	1.72	3.83
5.00	0.27	0.34	0.44	0.62	1.02	1.80	4.02
5.37	0.27	0.35	0.46	0.66	1.09	1.93	4.31
5.75	0.28	0.36	0.49	0.70	1.16	2.06	4.61
6.00	0.28	0.37	0.51	0.73	1.21	2.15	4.81
7.00	0.30	0.40	0.57	0.83	1.39	2.49	5.59
7.25	0.30	0.41	0.59	0.86	1.44	2.57	5.79
7.50	0.31	0.42	0.61	0.88	1.48	2.66	5.99
7.87	0.31	0.43	0.63	0.92	1.55	2.78	6.28
8.00	0.32	0.44	0.64	0.94	1.58	2.83	6.38
8.62	0.33	0.46	0.68	1.00	1.69	3.04	6.87
8.75	0.33	0.46	0.69	1.01	1.71	3.08	6.97
9.00	0.33	0.47	0.71	1.04	1.76	3.17	7.16
9.37	0.34	0.48	0.74	1.08	1.83	3.29	7.45
9.50	0.34	0.49	0.74	1.09	1.85	3.34	7.56
9.75	0.34	0.50	0.76	1.12	1.90	3.42	7.75
10.00	0.35	0.50	0.78	1.14	1.94	3.51	7.95
10.37	0.35	0.52	0.80	1.18	2.01	3.64	8.24

Table 3-B Valve Body Minimum Wall Thickness, t_m, in. (Cont'd)

Inside Dia. d, in. [Note (1)]	Minimum Wall Thickness — t_m, in.						
	Class 150	Class 300	Class 600	Class 900	Class 1500	Class 2500	Class 4500
10.87	0.36	0.53	0.84	1.24	2.10	3.81	8.63
11.00	0.36	0.54	0.85	1.25	2.13	3.85	8.73
11.12	0.37	0.54	0.85	1.26	2.15	3.89	8.83
11.37	0.37	0.55	0.87	1.29	2.20	3.98	9.02
11.75	0.38	0.56	0.90	1.33	2.27	4.11	9.32
12.00	0.38	0.57	0.91	1.35	2.31	4.19	9.52
12.25	0.38	0.58	0.93	1.38	2.36	4.28	9.71
12.87	0.39	0.60	0.97	1.44	2.47	4.49	10.20
13.00	0.40	0.60	0.98	1.46	2.50	4.53	10.30
13.12	0.40	0.61	0.99	1.47	2.52	4.57	10.40
13.25	0.40	0.61	1.00	1.48	2.54	4.62	10.50
13.50	0.41	0.62	1.01	1.51	2.59	4.70	10.70
14.00	0.41	0.64	1.05	1.56	2.68	4.87	11.09
14.62	0.42	0.66	1.09	1.63	2.80	5.08	11.57
14.75	0.43	0.66	1.10	1.64	2.82	5.13	11.68
14.87	0.43	0.67	1.11	1.65	2.84	5.17	11.77
15.00	0.43	0.67	1.12	1.67	2.87	5.21	11.87
15.25	0.43	0.68	1.13	1.69	2.91	5.30	12.07
15.75	0.44	0.70	1.17	1.75	3.00	5.47	12.46
16.00	0.45	0.70	1.18	1.77	3.05	5.55	12.66
16.37	0.45	0.72	1.21	1.81	3.12	5.68	12.95
16.50	0.45	0.72	1.22	1.82	3.14	5.73	13.05
17.00	0.46	0.74	1.25	1.88	3.24	5.90	13.44
17.25	0.47	0.75	1.27	1.90	3.28	5.98	13.64
17.50	0.47	0.75	1.29	1.93	3.33	6.07	13.84
17.62	0.47	0.76	1.29	1.94	3.35	6.11	13.93
18.00	0.48	0.77	1.32	1.98	3.42	6.24	14.23
18.25	0.48	0.78	1.34	2.01	3.47	6.32	14.42
18.87	0.49	0.80	1.38	2.07	3.58	6.53	14.91
19.00	0.49	0.80	1.39	2.09	3.60	6.58	15.01
19.25	0.50	0.81	1.40	2.11	3.65	6.66	15.21
19.62	0.50	0.83	1.43	2.15	3.72	6.79	15.50
20.00	0.51	0.84	1.46	2.19	3.79	6.92	15.80
20.12	0.51	0.84	1.46	2.20	3.81	6.96	15.89
20.37	0.52	0.85	1.48	2.23	3.86	7.04	16.09
20.75	0.52	0.86	1.51	2.27	3.93	7.17	16.39
21.00	0.53	0.87	1.52	2.29	3.97	7.26	16.58
21.25	0.53	0.88	1.54	2.32	4.02	7.34	16.78
22.00	0.54	0.90	1.59	2.40	4.16	7.60	17.37
22.62	0.55	0.93	1.63	2.46	4.27	7.81	17.85
22.75	0.56	0.93	1.64	2.48	4.30	7.86	17.96
23.00	0.56	0.94	1.66	2.50	4.34	7.94	18.15
23.25	0.56	0.95	1.68	2.53	4.39	8.03	18.35
23.75	0.57	0.96	1.71	2.58	4.48	8.20	18.74
24.00	0.58	0.97	1.73	2.61	4.53	8.28	18.94

Table 3-B Valve Body Minimum Wall Thickness, t_m, in. (Cont'd)

Inside Dia. d, in. [Note (1)]	Minimum Wall Thickness — t_m, in.						
	Class 150	Class 300	Class 600	Class 900	Class 1500	Class 2500	Class 4500
24.25	0.57	0.98	1.74	2.63	4.57	8.37	19.13
24.62	0.58	0.99	1.77	2.67	4.64	8.49	19.42
25.00	0.58	1.00	1.79	2.71	4.71	8.62	19.72
25.25	0.59	1.01	1.81	2.74	4.76	8.71	19.92
25.50	0.59	1.02	1.83	2.76	4.80	8.79	20.11
26.00	0.60	1.04	1.86	2.82	4.90	8.96	20.51
26.25	0.60	1.05	1.88	2.84	4.94	9.05	20.70
26.37	0.60	1.05	1.89	2.86	4.96	9.09	20.80
27.00	0.62	1.07	1.93	2.92	5.08	9.30	21.29
27.25	0.62	1.08	1.95	2.95	5.13	9.39	21.49
27.37	0.62	1.08	1.95	2.96	5.15	9.43	21.58
28.00	0.63	1.10	2.00	3.03	5.26	9.65	22.08
28.25	0.64	1.11	2.01	3.05	5.31	9.73	22.27
29.00	0.65	1.14	2.07	3.13	5.45	9.99	22.86
29.25	0.65	1.15	2.08	3.16	5.49	10.07	23.06
30.00	0.66	1.17	2.13	3.23	5.63	10.33	23.65
31.00	0.68	1.20	2.20	3.34	5.82	10.67	24.43
32.00	0.70	1.24	2.27	3.44	6.00	11.01	25.22
33.00	0.71	1.27	2.34	3.55	6.19	11.35	26.00
34.00	0.73	1.30	2.40	3.65	6.37	11.69	26.79
35.00	0.75	1.34	2.47	3.76	6.56	12.03	27.57
36.00	0.76	1.37	2.54	3.86	6.74	12.37	28.36
37.00	0.78	1.40	2.61	3.97	6.92	12.71	29.14
38.00	0.79	1.44	2.68	4.07	7.11	13.05	29.93
39.00	0.81	1.47	2.74	4.18	7.29	13.40	30.71
40.00	0.83	1.51	2.81	4.28	7.48	13.74	31.50
41.00	0.84	1.54	2.88	4.38	7.66	14.08	32.28
42.00	0.86	1.57	2.95	4.49	7.85	14.42	33.06
43.00	0.88	1.61	3.01	4.59	8.03	14.76	33.85
44.00	0.89	1.64	3.08	4.70	8.21	15.10	34.63
45.00	0.91	1.67	3.15	4.80	8.40	15.44	35.42
46.00	0.92	1.71	3.22	4.91	8.58	15.78	36.20
47.00	0.94	1.74	3.29	5.01	8.77	16.12	36.99
48.00	0.96	1.77	3.35	5.12	8.95	16.46	37.77
49.00	0.97	1.81	3.42	5.22	9.14	16.80	38.56
50.00	0.99	1.84	3.49	5.32	9.32	17.15	39.34

NOTE (1) See para. 6.1.2.

Table 4 Minimum Wall Thickness for Socket Welding and Threaded Ends

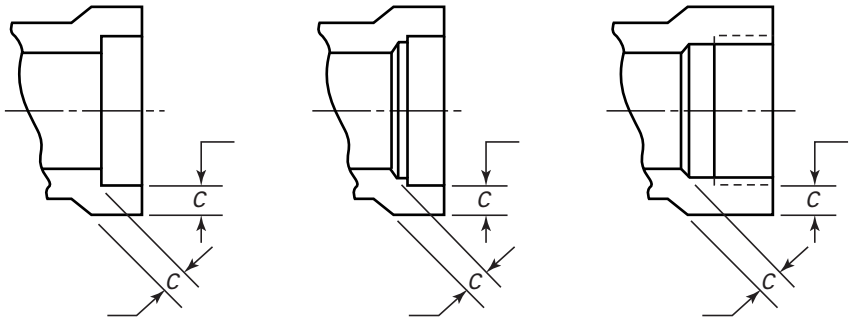

	Classes 150 and 300		Class 600		Class 800[1]		Class 900		Class 1500		Class 2500		Class 4500	
	Minimum Wall Thickness, *C*													
NPS	mm	*in.*	mm	*in.*	mm	*in.*	mm	*in.*	mm	*in.*	mm	*in.*	mm	*in.*
1/8	3.0	*0.12*	3.0	*0.12*	3.0	*0.12*	3.6	*0.14*	3.6	*0.14*	5.3	*0.21*	5.6	*0.22*
1/4	3.0	*0.12*	3.3	*0.13*	3.3	*0.13*	4.1	*0.16*	4.1	*0.16*	6.6	*0.26*	7.4	*0.29*
3/8	3.0	*0.12*	3.6	*0.14*	3.6	*0.14*	4.3	*0.17*	4.3	*0.17*	7.1	*0.28*	9.4	*0.37*
1/2	3.3	*0.13*	4.1	*0.16*	4.1	*0.16*	5.3	*0.21*	5.3	*0.21*	8.1	*0.32*	11.2	*0.44*
3/4	3.6	*0.14*	4.3	*0.17*	4.3	*0.17*	6.1	*0.24*	6.1	*0.24*	8.6	*0.34*	13.0	*0.51*
1	3.8	*0.15*	5.1	*0.20*	5.1	*0.20*	6.9	*0.27*	6.9	*0.27*	9.9	*0.39*	15.7	*0.62*
1 1/4	3.8	*0.15*	5.3	*0.21*	5.3	*0.21*	7.1	*0.28*	8.1	*0.32*	11.7	*0.46*	19.1	*0.75*
1 1/2	4.1	*0.16*	5.6	*0.22*	5.8	*0.23*	7.9	*0.31*	8.9	*0.35*	13.0	*0.51*	21.3	*0.84*
2	4.6	*0.18*	6.1	*0.24*	6.9	*0.27*	9.7	*0.38*	10.7	*0.42*	15.7	*0.62*	25.9	*1.02*
2 1/2	5.6	*0.22*	7.6	*0.30*	7.9	*0.31*	10.4	*0.41*	12.4	*0.49*	18.5	*0.73*	31.0	*1.22*

NOTE:

(1) Class 800 is not a tabulated ASME B16.34 designation. It is an intermediate class that is widely used for socket welding and threaded end valves.

MANDATORY APPENDIX I
RADIOGRAPHY EXAMINATION: PROCEDURE AND ACCEPTANCE STANDARDS

I-1 RADIOGRAPHY PROCEDURE

I-1.1

ASTM E 94, Recommended Practice for Radiographic Testing, and ASTM E 142, Controlling Quality of Radiographic Testing, shall be used as a guide.

I-1.2

The film shall be as close as practical to the part being radiographed.

I-1.3

Any commercially available intensifying screen, except those of the fluorescent type, may be used.

I-1.4

All film shall bear identification markers to properly orient the film for interpretation and to denote the actual part under examination. Film shall be marked to identify the organization producing the radiograph and the date exposed.

I-1.5

Penetrameters shall be used on each radiograph. Penetrameters shall conform to the requirements of ASTM E 142.

I-1.6

Any commercially available film may be used, provided it is equal to or finer grained than Type 2, ASTM E 94.

I-1.7

The manufacturer, at his option, may use a double film technique and a combination of a single and double viewing so as to cover a greater latitude in part thickness with a single exposure.

I-1.8

Radiographs shall be within the following photographic (H & D) density range:

(a) single film viewing — 1.5 min., 4.0 max.

(b) superimposed viewing of double film, each single film — 1.00 min., 2.5 max., with a double film — 4.0 max.

I-1.9

Surfaces shall be such that radiographic contrast due to surface condition cannot mask or be confused with that of any defect.

I-1.10

Single wall thickness shall be radiographed wherever practical.

I-1.11

The radiographic sensitivity shall be 2 – 4T for thickness up to and including 19 mm (0.75 in.) and 2 – 2T for thickness greater than 19 mm (0.75 in.).

I-2 ACCEPTANCE STANDARDS

I-2.1

For wall thickness $t \leq 50$ mm ($t \leq 2$ in.) the comparative plates of ASTM E 446 define acceptable indications as shown in Table I-1.

I-2.2

For wall thickness 50 mm $\leq t <$ 115 mm (2 in. $\leq t <$ 4.5 in.) the comparative plates of ASTM E 186 define acceptable indications as shown in Table I-2.

I-2.3

For wall thickness 115 mm $\leq t \leq$ 305 mm (4.5 in. $\leq t \leq$ 12 in.) the comparative plates of ASTM E 280 define acceptable indications as shown in Table I-3.

Table I-1
Acceptance Criteria for Thickness per para. I-2.1

Discontinuity Type	Category	Acceptable Comparative Plate ASTM E 446
Gas	A	A2
Sand	B	B3
Shrink, Type 1	C	CA2
Shrink, Type 2	C	CB3
Shrink, Type 3	C	CC3
Shrink, Type 4	C	CD3
Hot tears and cracks	D & E	None
Inserts (chills, chaplets)	F	None

Table I-2
Acceptance Criteria for Thickness per para. I-2.2

Discontinuity Type	Category	Acceptable Comparative Plate ASTM E 186
Gas Porosity	A	A3
Sand and slag inclusions	B	B3
Shrink, Type 1	C	CA3
Shrink, Type 2	C	CB3
Shrink, Type 3	C	CC3
Crack	D	None
Hot tear	E	None
Insert	F	None

Table I-3
Acceptance Criteria for Thickness per para. I-2.3

Discontinuity Type	Category	Acceptable Comparative Plate ASTM E 280
Gas Porosity	A	A3
Sand and slag inclusions	B	B3
Shrink, Type 1	C	CA3
Shrink, Type 2	C	CB3
Shrink, Type 3	C	CC3
Crack	D	None
Hot tear	E	None
Insert	F	None

MANDATORY APPENDIX II
MAGNETIC PARTICLE EXAMINATION: PROCEDURE AND ACCEPTANCE STANDARDS

II-1 PROCEDURE

Magnetic particle examination procedure for castings shall be in accordance with ASTM E 709, Standard Recommended Practice for Magnetic Particle Examination. For forgings, plates, and bars, the examination procedures shall be in accordance with ASTM A 275, Magnetic Particle Examination of Steel Forgings.

II-2 ACCEPTANCE STANDARDS[1]

II-2.1 Castings

Maximum acceptable indications are as follows:

(a) Linear Indications:

(1) 8 mm (0.3 in.) long for materials up to 13 mm (0.5 in.) thick

(2) 13 mm (0.5 in.) long for materials 13 mm to 25 mm (0.5 in. to 1.0 in.) thick

(3) 18 mm (0.7 in.) long for materials over 25 mm (1.0 in.) thick

For linear indications, the indications must be separated by a distance greater than the length of an acceptable indication. A linear indication is one with length in excess of 3 times the width.

(b) Rounded Indications:

(1) 8 mm (0.3 in.) dia. for materials up to 13 mm (0.5 in.) thick

(2) 13 mm (0.5 in.) dia. for materials over 13 mm (0.5 in.) thick

Four or more rounded indications in a line separated by 1.5 mm (0.06 in.) or less edge to edge are unacceptable. Rounded indications are those which are not defined as linear indications.

II-2.2 Forgings and Rolled or Wrought Material

Maximum acceptable indications are as follows:

(a) Linear Indications:

(1) 5 mm (0.2 in.) long for materials up to 13 mm (0.5 in.) thick

(2) 10 mm (0.4 in.) long for materials over 13 mm (0.5 in.) to 25 mm (1 in.) thick

(3) 15 mm (0.6 in.) long for materials over 25 mm (1.0 in.) thick.

For linear indications, the indications must be separated by a distance greater than the length of an acceptable indication. A linear indication is one with length in excess of 3 times the width.

(b) Rounded Indications

(1) 5 mm (0.2 in.) dia. for materials up to 13 mm (0.5 in.) thick

(2) 8 mm (0.3 in.) dia. for materials over 13 mm (0.5 in.) thick.

Four or more rounded indications in a line separated by a 1.5 mm (0.06 in.) or less edge-to-edge are unacceptable. Rounded indications are those which are not defined as linear indications.

[1] An indication may be larger than the imperfection that causes it. However, the size of the indication is the basis for acceptance evaluation.

MANDATORY APPENDIX III
LIQUID PENETRANT EXAMINATION: PROCEDURE AND ACCEPTANCE STANDARDS

III-1 PROCEDURE

Liquid penetrant procedure shall be in accordance with ASTM E 165.

III-2 ACCEPTANCE STANDARDS[1]

III-2.1 Castings

Maximum acceptable indications are as follows:

(a) Linear Indications

(1) 8 mm (0.3 in.) long for materials up to 13 mm (0.5 in.) thick

(2) 13 mm (0.5 in.) long for materials 13 mm to 25 mm (0.5 in. to 1.0 in.) thick

(3) 18 mm (0.7 in.) long for materials over 25 mm (1.0 in.) thick

For linear indications, the indications must be separated by a distance greater than the length of an acceptable indication. A linear indication is one with length in excess of 3 times the width.

(b) Rounded Indications

(1) 8 mm (0.3 in.) diameter for materials up to 13 mm (0.5 in.) thick

(2) 13 mm (0.5 in.) diameter for materials over 13 mm (0.5 in.) thick

Four or more rounded indications in a line separated by 1.5 mm (0.06 in.) or less edge-to-edge are unacceptable. Rounded indications are those that are not defined as linear indications.

III-2.2 Forgings and Rolled or Wrought Material

Maximum acceptable indications are as follows:

(a) Linear Indications

(1) 5 mm (0.2 in.) long for materials 13 mm (0.5 in.) or less thick

(2) 10 mm (0.4 in.) long for materials over 13 mm (0.5 in.) to 25 mm (1.0 in.) thick

(3) 15 mm (0.6 in.) long for materials over 25 mm (1.0 in.) thick

For linear indications, the indications must be separated by a distance greater than the length of an acceptable indication. A linear indication is one with length in excess of 3 times the width.

(b) Rounded Indications

(1) 5 mm (0.2 in.) diameter for materials up to 13 mm (0.5 in.) thick

(2) 8 mm (0.3 in.) diameter for materials over 13 mm (0.5 in.) thick

Four or more rounded indications in a line separated by 1.5 mm (0.06 in.) or less edge to edge are unacceptable. Rounded indications are those that are not defined as linear indications.

[1] An indication may be larger than the imperfection that causes it. However, the size of the indication is the basis for acceptance evaluation.

MANDATORY APPENDIX IV
ULTRASONIC EXAMINATION: PROCEDURE AND ACCEPTANCE STANDARDS

IV-1 PROCEDURE

Ultrasonic examination procedure shall meet the requirements of ASTM A 388 for forgings, bars, plates, and tubular products and ASTM A 609 for castings.

IV-2 ACCEPTANCE STANDARDS

IV-2.1 Straight Beam Examination

Indications which are equal to or exceed that obtained from a 6.4 mm (0.25 in.) diameter flat bottomed hole in a calibration test piece of thickness equal to the defect depth are unacceptable.

IV-2.2 Angle Beam Examination

Indications which are equal to or exceed those obtained from a 60 deg V-notch, 25 mm (1.0 in.) long and having a depth not greater than 5% of the nominal wall thickness in a test piece are unacceptable.

MANDATORY APPENDIX V
REQUIREMENTS FOR LIMITED CLASS VALVES

V-1 GENERAL

This Appendix covers alternative requirements for valves having either threaded or welding ends and is specifically restricted to sizes NPS $2\frac{1}{2}$ and smaller. Valves complying with the requirements of this Appendix may be designated as Limited Class. There is no provision for this designation for flanged end valves.

V-1.2 Applicability

The paragraphs of this Appendix are numbered corresponding with those of the body of the Standard. All requirements for Standard Class valves are applicable to Limited Class except as otherwise modified by this Appendix.

V-2.1 General

Valves conforming to the requirements of this Appendix and identified as Limited Class shall be suitable for pressure-temperature ratings determined in accordance with para. V-2.1.3. Threaded end valves rated above Class 2500 and socket-weld-end valves rated above Class 4500 are not within the scope of this Standard.

V-2.1.3 Limited Class Rating Method. Pressure-temperature ratings for Limited Class valves are established for Group 1 and Group 2 materials of Table V-1 by the equation

$$p_{ld} = \frac{7000}{7000 - (y - 0.4)P_r} p_{sp}$$

where

p_{ld} = Limited Class rated working pressure for the specified material at temperature T

P_r = pressure class rating index. For all designations Class 300 through 4500, P_r is equal to the Class designation number (e.g., for Class 300, $P_r = 300$). For Class 150, $P_r = 115$. For a rating designation between Class 150 and Class 300, the interpolation shall be made using $P_r = 115$ for Class 150. The equation is not valid for P_r greater than 4500.

p_{sp} = Special Class rated working pressure for the specified material at temperature T as determined by the method of Nonmandatory Appendix B. These Special Class working pressures are tabulated in Table 2 having a designation of "Special Class." The tabulated values shall be used for establishing Limited Class ratings.

y = a material coefficient having values as listed in Table V-1

In no case shall the working pressure increase with increasing temperature. This shall be verified by the manufacturer for all rating points greater than 900°F for ferritic steels and 1050°F for austenitic steels.

V-2.1.6 Fabrication by Welding. Fabricated valves that are identified as Limited Class shall conform with the requirements of para. 2.1.6(c)(2) for Special Class.

V-4.2.3 Rating. Valves shall be marked on the valve body with the number for the appropriate pressure rating class designation except that Limited Class and Intermediate Rating Limited Class may instead be marked on the valve body with a specific rated pressure and temperature. For all valves in Limited Class, the identification plate shall show the applicable pressure rating at 38°C (100°F) and other markings required by MSS SP-25. Valves conforming to Limited Class requirements, and acknowledged as such, shall include the designation "B16.34LTD" on the identification plate.

V-6.1 Body Dimensions

Limited Class is restricted in application to valve body geometries that have internal wetted pressure boundary surfaces that are generally characterized by cylindrical

Table V-1 Material Coefficient, *y*

	Applicable Temperature					
Material	480°C (900°F) and below	510°C (950°F)	538°C (1000°F)	565°C (1050°F)	595°C (1100°F)	620°C (1150°F) and above
Ferritic steels	0.4	0.5	0.7	0.7	0.7	0.7
Austenitic steels	0.4	0.4	0.4	0.4	0.5	0.7
Other ductile materials	0.4	0.4	0.4	0.4	0.4	0.4

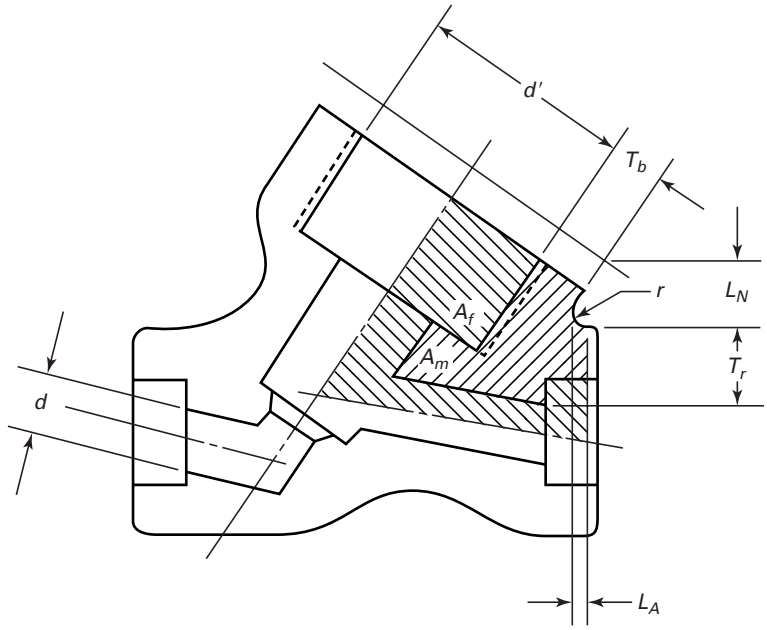

Fig. V-1 Limited Class Stress Area Limits

passages, cylindrical or spherical chambers, and intersections thereof.

V-6.1.1 Wall Thickness. For inspection purposes, the minimum thickness of the wall surrounding the body run flow passage shall be as shown in Table 3A or 3B as applicable.

V-6.1.2 Inside Diameter. For the purpose of determining flow passageway wall thickness, the inside diameter d (see Fig. V-1), is the diameter of the cylindrical flow passage.

V-6.1.3 Valve Body Necks. The minimum thickness of the wall for the body neck shall be that shown in Table 3A or 3B with d for this determination taken as two-thirds of d' where d' is the inside diameter of the body neck. In no case shall the body neck thickness be less than the minimum value determined for the flow passage in para. V-6.1.1. For values of body neck inside diameter not shown in Table 3A or 3B as applicable, interpolation is permitted.

V-6.1.5 Contours for Body Run Transitions. The requirements of para. 6.1.5 are not applicable to Limited Class.

V-6.1.8 Additional Metal Thickness. For Limited Class, it is required that metal thickness reinforcement be provided to satisfy the following:

$$S_o \geq p_o \left(\frac{A_f}{A_m} + 0.5 \right)$$

where

S_o = the lesser value of either two-thirds of the yield strength, one quarter of the ultimate tensile strength, or the allowable stress of the body material at 38°C (100°F) as listed in the ASME Boiler and Pressure Vessel Code, Section II, Part D, for either Section I or Section VIII, Div. 1;

p_o = rated working pressure at 38°C (100°F)

A_f = fluid area (see Fig. V-1)

A_m = metal area (see Fig. V-1)

The fluid area and metal area are determined from a drawing of the valve body crotch region in the mutual plane of the bonnet and flow passage center lines (see Fig. V-1).[1] The fluid and metal areas are to be based on the most adverse combination of dimensions permitted by tolerances. In Fig. V-1, the distances L_N and L_A which define fluid and metal area boundaries are determined as

$$L_N = 0.5r + 0.354 \sqrt{T_b(d' + T_b)}$$

and L_A as the larger of

$$L_A = 0.5d' - T_b$$

or

$$L_A = T_r$$

[1] For guidance in regard to other valve configurations, see ASME Boiler and Pressure Vessel Code, Section III, NB-3545.

where

d' = body neck inside diameter at crotch region

T_b = neck wall thickness at crotch region

T_r = body run wall thickness at crotch region

r = external fillet radius at crotch

If a calculated boundary lies beyond the body run end or neck end, the sections to be used for area determination shall terminate at the body run end or neck end.

MANDATORY APPENDIX VI
BASIS EQUATIONS FOR MINIMUM WALL THICKNESS

Minimum wall thickness requirements may be satisfied by compliance with either the values shown in Table 3A or 3B as applicable or the use of the equations listed in this Appendix.[1] Refer to para. 1.2.6 concerning valid units.

[1] The wall thickness values obtained from either Table 3A, Table 3B, or the equations given in this Appendix are not to be interpreted as design values. They are,in basic terms, minimum requirements that must be met in order to be in conformity with this Standard.

Table VI-1 Basis Equations for Minimum Wall Thickness

Class P_c	Diameter, d mm	Metric eq., t_m mm	Round
150	$3 \le d < 50$	t_m (150) = 0.064 d + 2.34	off, one decimal
150	$50 \le d \le 100$	t_m (150) = 0.020 d + 4.5	off, one decimal
150	$100 < d \le 1300$	t_m (150) = 0.0163 d + 4.70	off, one decimal
300	$3 \le d < 50$	t_m (300) = 0.080 d + 2.29	off, one decimal
300	$50 \le d \le 100$	t_m (300) = 0.030 d + 4.83	off, one decimal
300	$100 < d \le 1300$	t_m (300) = 0.0334 d + 4.32	off, one decimal
600	$3 \le d < 25$	t_m (600) = 0.090 d + 2.54	off, one decimal
600	$25 \le d \le 50$	t_m (600) = 0.060 d + 3.30	off, one decimal
600	$50 < d \le 1300$	t_m (600) = 0.06777 d + 2.54	off, one decimal
900	$3 \le d < 25$	t_m (900) = 0.160 d + 2.29	off, one decimal
900	$25 \le d \le 50$	t_m (900) = 0.060 d + 4.83	off, one decimal
900	$50 < d \le 1300$	t_m (900) = 0.10449 d + 2.54	off, one decimal
1500	$3 \le d \le 1300$	t_m (1500) = 0.18443 d + 2.54	off, one decimal
2500	$3 \le d \le 1300$	t_m (2500) = 0.34091 d + 2.54	off, one decimal
4500	$3 \le d \le 1300$	t_m (4500) = 0.78488 d + 2.54	off, one decimal

Class P_c	Diameter, d in.	Inch eq., t_m in.	Round
150	$0.12 \le d < 2$	t_m (150) = 0.064 d + 0.092	off, two decimals
150	$2 \le d < 4$	t_m (150) = 0.020 d + 0.18	off, two decimals
150	$4 < d < 50$	t_m (150) = 0.0163 d + 0.185	off, two decimals
300	$0.12 \le d < 2$	t_m (300) = 0.080 d + 0.09	off, two decimals
300	$2 \le d \le 4$	t_m (300) = 0.030 d + 0.19	off, two decimals
300	$4 < d \le 50$	t_m (300) = 0.0334 d + 0.17	off, two decimals
600	$0.12 \le d < 1$	t_m (600) = 0.090 d + 0.10	off, two decimals
600	$1 \le d \le 2$	t_m (600) = 0.060 d + 0.13	off, two decimals
600	$2 < d \le 50$	t_m (600) = 0.06777 d + 0.10	off, two decimals
900	$0.12 \le d < 1$	t_m (900) = 0.160 d + 0.09	off, two decimals
900	$1 \le d \le 2$	t_m (900) = 0.060 d + 0.19	off, two decimals
900	$2 < d \le 50$	t_m (900) = 0.10449 d + 0.10	off, two decimals
1500	$0.12 \le d \le 50$	t_m (1500) = 0.18443 d + 0.10	off, two decimals
2500	$0.12 \le d \le 50$	t_m (2500) = 0.34091 d + 0.10	off, two decimals
4500	$0.12 \le d \le 50$	t_m (4500) = 0.78488 d + 0.10	off, two decimals

MANDATORY APPENDIX VII
PRESSURE-TEMPERATURE RATINGS: U.S. CUSTOMARY UNITS

(For Metric units see Table 2.)

Table VII-2-1.1 Ratings For Group 1.1 Materials

A 105 (1)(2)	A 515 Gr. 70 (1)	A 696 Gr. C	A 672 Gr. B70 (1)
A 216 Gr. WCB (1)	A 516 Gr. 70 (1)(3)	A 350 Gr. LF6 Cl.1 (4)	A 672 Gr. C70 (1)
A 350 Gr. LF2 (1)	A 537 Cl. 1 (5)	A 350 Gr. LF3 (6)	

NOTES:

(1) Upon prolonged exposure to temperatures above 800°F, the carbide phase of steel may be converted to graphite. Permissible, but not recommended for prolonged use above 800°F.

(2) Only killed steel shall be used above 850°F.

(3) Not to be used over 850°F.

(4) Not to be used over 500°F.

(5) Not to be used over 700°F.

(6) Not to be used over 650°F.

A – Standard Class

Temperature, °F	Working Pressures by Class, psig						
	150	300	600	900	1500	2500	4500
−20 to 100	285	740	1,480	2,220	3,705	6,170	11,110
200	260	680	1,360	2,035	3,395	5,655	10,185
300	230	655	1,310	1,965	3,270	5,450	9,815
400	200	635	1,265	1,900	3,170	5,280	9,505
500	170	605	1,205	1,810	3,015	5,025	9,040
600	140	570	1,135	1,705	2,840	4,730	8,515
650	125	550	1,100	1,650	2,745	4,575	8,240
700	110	530	1,060	1,590	2,665	4,425	7,960
750	95	505	1,015	1,520	2,535	4,230	7,610
800	80	410	825	1,235	2,055	3,430	6,170
850	65	320	640	955	1,595	2,655	4,785
900	50	230	460	690	1,150	1,915	3,455
950	35	135	275	410	685	1,145	2,055
1000	20	85	170	255	430	715	1,285

B – Special Class

Temperature, °F	Working Pressure by Class, psig						
	150	300	600	900	1500	2500	4500
−20 to 100	290	750	1,500	2,250	3,750	6,250	11,250
200	290	750	1,500	2,250	3,750	6,250	11,250
300	285	740	1,480	2,220	3,700	6,170	11,105
400	280	735	1,465	2,200	3,665	6,105	10,995
500	280	735	1,465	2,200	3,665	6,105	10,995
600	280	735	1,465	2,200	3,665	6,105	10,995
650	275	715	1,430	2,145	3,575	5,960	10,730
700	265	690	1,380	2,075	3,455	5,760	10,365
750	245	635	1,270	1,905	3,170	5,285	9,515
800	195	515	1,030	1,545	2,570	4,285	7,715
850	155	400	795	1,195	1,995	3,320	5,980
900	110	285	575	860	1,435	2,395	4,305
950	65	170	345	515	855	1,430	2,570
1000	40	105	215	320	535	895	1,605

Table VII-2-1.2 Ratings For Group 1.2 Materials

A 106 Gr. C (1)	A 203 Gr. E (2)	A 350 Gr. LF6 Cl. 2 (3)	A 352 Gr. LC3 (4)
A 203 Gr. B (2)	A 216 Gr. WCC (2)	A 352 Gr. LC2 (4)	A 352 Gr. LCC (4)

NOTES:
(1) Not to be used over 800°F.
(2) Upon prolonged exposure to temperatures above 800°F, the carbide phase of steel may be converted to graphite. Permissible, but not recommended for prolonged use above 800°F.
(3) Not to be used over 500°F.
(4) Not to be used over 650°F.

A – Standard Class

Temperature, °F	Working Pressures by Class, psig						
	150	300	600	900	1500	2500	4500
−20 to 100	290	750	1,500	2,250	3,750	6,250	11,250
200	260	750	1,500	2,250	3,750	6,250	11,250
300	230	730	1,455	2,185	3,640	6,070	10,925
400	200	705	1,405	2,110	3,520	5,865	10,555
500	170	665	1,330	1,995	3,325	5,540	9,965
600	140	605	1,210	1,815	3,025	5,040	9,070
650	125	590	1,175	1,765	2,940	4,905	8,825
700	110	555	1,110	1,665	2,775	4,630	8,330
750	95	505	1,015	1,520	2,535	4,230	7,610
800	80	410	825	1,235	2,055	3,430	6,170
850	65	320	640	955	1,595	2,655	4,785
900	50	225	445	670	1,115	1,855	3,345
950	35	135	275	410	685	1,145	2,055
1000	20	85	170	255	430	715	1,285

B – Special Class

Temperature, °F	Working Pressures by Class, psig						
	150	300	600	900	1500	2500	4500
−20 to 100	290	750	1,500	2,250	3,750	6,250	11,250
200	290	750	1,500	2,250	3,750	6,250	11,250
300	290	750	1,500	2,250	3,750	6,250	11,250
400	290	750	1,500	2,250	3,750	6,250	11,250
500	290	750	1,500	2,250	3,750	6,250	11,250
600	290	750	1,500	2,250	3,750	6,250	11,250
650	290	750	1,500	2,250	3,750	6,250	11,250
700	280	715	1,425	2,140	3,565	5,940	10,690
750	280	635	1,270	1,905	3,170	5,285	9,515
800	255	515	1,030	1,545	2,570	4,285	7,715
850	200	400	795	1,195	1,995	3,320	5,980
900	140	280	555	835	1,395	2,320	4,180
950	85	170	345	515	855	1,430	2,570
1000	55	105	215	320	535	895	1,605

Table VII-2-1.3 Ratings For Group 1.3 Materials

A 203 Gr. A (1)	A 352 Gr. LCB (2)	A 516 Gr. 65 (1)(3)	A 672 Gr. B65 (1)
A 203 Gr. D (1)	A 352 Gr. LC1 (2)	A 675 Gr. 65 (1)(4)(5)	A 672 Gr. C65 (1)
A 217 Gr. WC1 (6)(7)	A 515 Gr. 65 (1)		

NOTES:

(1) Upon prolonged exposure to temperatures above 800°F, the carbide phase of steel may be converted to graphite. Permissible, but not recommended for prolonged use above 800°F.

(2) Not to be used over 650°F.

(3) Not to be used over 850°F.

(4) Leaded grades shall not be used where welded or in any application above 500°F.

(5) For service temperatures above 850°F, it is recommended that killed steel containing not less than 0.10% residual silicon be used.

(6) Upon prolonged exposure to temperatures above 875°F, the carbide phase of steel of carbon-molybdennum steel may be converted to graphite. Permissible, but not recommended for prolonged use above 875°F.

(7) Use normalized and tempered material only.

A – Standard Class

Temperature, °F	Working Pressures by Class, psig						
	150	300	600	900	1500	2500	4500
−20 to 100	265	695	1,395	2,090	3,480	5,805	10,445
200	255	660	1,320	1,980	3,300	5,505	9,905
300	230	640	1,275	1,915	3,190	5,315	9,565
400	200	615	1,230	1,845	3,075	5,125	9,225
500	170	585	1,175	1,760	2,930	4,885	8,795
600	140	550	1,105	1,655	2,755	4,595	8,270
650	125	535	1,065	1,600	2,665	4,440	7,990
700	110	510	1,025	1,535	2,560	4,270	7,685
750	95	475	955	1,430	2,385	3,970	7,150
800	80	390	780	1,175	1,955	3,255	5,865
850	65	300	595	895	1,490	2,485	4,475
900	50	200	405	605	1,010	1,685	3,035
950	35	135	275	410	685	1,145	2,055
1000	20	85	170	255	430	715	1,285

B – Special Class

Temperature, °F	Working Pressures by Class, psig						
	150	300	600	900	1500	2500	4500
−20 to 100	290	695	1,395	2,090	3,480	5,805	10,445
200	290	695	1,395	2,090	3,480	5,805	10,445
300	290	695	1,395	2,090	3,480	5,805	10,445
400	290	695	1,395	2,090	3,480	5,805	10,445
500	290	695	1,395	2,090	3,480	5,805	10,445
600	290	695	1,395	2,090	3,480	5,805	10,445
650	290	695	1,390	2,080	3,470	5,780	10,405
700	280	660	1,320	1,985	3,305	5,510	9,915
750	280	595	1,190	1,785	2,980	4,965	8,935
800	245	490	975	1,465	2,445	4,070	7,330
850	185	375	745	1,120	1,865	3,105	5,595
900	125	255	505	760	1,265	2,105	3,795
950	85	170	345	515	855	1,430	2,570
1000	55	105	215	320	535	895	1,605

Table VII-2-1.4 Ratings For Group 1.4 Materials

A 106 Gr. B (1)	A 516 Gr. 60 (1)(2)	A 675 Gr. 65 (1)(3)(4)	A 672 Gr. B60 (1)
A 350 Gr. LF1 (1)	A 675 Gr. 60 (1)(2)(3)	A 696 Gr. B	A 672 Gr. C60 (1)
A 515 Gr. 60 (1)(2)			

NOTES:
(1) Upon prolonged exposure to temperatures above 800°F, the carbide phase of steel may be converted to graphite. Permissible, but not recommended for prolonged use above 800°F.
(2) Not to be used over 850°F.
(3) Leaded grades shall not be used where welded or in any application above 500°F.
(4) For service temperatures above 850°F, it is recommended that killed steels containing not less than 0.10% residual silicon be used.

A – Standard Class

Temperature, °F	Working Pressures by Class, psig						
	150	300	600	900	1500	2500	4500
−20 to 100	235	615	1,235	1,850	3,085	5,145	9,255
200	215	565	1,130	1,695	2,830	4,715	8,485
300	210	545	1,090	1,635	2,725	4,545	8,175
400	200	525	1,055	1,580	2,635	4,390	7,900
500	170	500	1,005	1,505	2,510	4,185	7,530
600	140	475	945	1,420	2,365	3,945	7,095
650	125	455	915	1,370	2,285	3,805	6,850
700	110	440	885	1,325	2,210	3,685	6,635
750	95	430	855	1,285	2,140	3,565	6,420
800	80	370	740	1,110	1,850	3,085	5,555
850	65	300	595	895	1,490	2,485	4,475
900	50	170	345	515	855	1,430	2,570
950	35	135	275	410	685	1,145	2,055
1000	20	85	170	255	430	715	1,285

B – Special Class

Temperature, °F	Working Pressures by Class, psig						
	150	300	600	900	1500	2500	4500
−20 to 100	245	645	1,285	1,930	3,215	5,355	9,645
200	245	645	1,285	1,930	3,215	5,355	9,645
300	245	645	1,285	1,930	3,215	5,355	9,645
400	245	645	1,285	1,930	3,215	5,355	9,645
500	245	645	1,285	1,930	3,215	5,355	9,645
600	235	615	1,230	1,850	3,080	5,135	9,240
650	230	595	1,190	1,785	2,975	4,955	8,920
700	220	575	1,150	1,730	2,880	4,800	8,640
750	215	555	1,115	1,670	2,785	4,645	8,355
800	175	465	925	1,390	2,315	3,855	6,945
850	145	375	745	1,120	1,865	3,105	5,595
900	80	215	430	645	1,070	1,785	3,215
950	65	170	345	515	855	1,430	2,570
1000	40	105	215	320	535	895	1,605

Table VII-2-1.5 Ratings For Group 1.5 Materials

A 182 Gr. F1 (1)	A 204 Gr. A (1)	A 691 Gr. CM-70 (1)
A 204 Gr. A (1)		

NOTE:
(1) Upon prolonged exposure to temperatures above 875°F, the carbide phase of carbon-molybdenum steel may be converted to graphite. Permissible, but not recommended for prolonged use above 875°F.

A – Standard Class

Temperature, °F	Working Pressures by Class, psig						
	150	300	600	900	1500	2500	4500
−20 to 100	265	695	1,395	2,090	3,480	5,805	10,445
200	260	695	1,395	2,090	3,380	5,805	10,445
300	230	685	1,375	1,960	3,435	5,725	10,305
400	200	660	1,325	1,985	3,310	5,520	9,935
500	170	640	1,285	1,925	3,210	5,350	9,625
600	140	605	1,210	1,815	3,025	5,040	9,070
650	125	590	1,175	1,765	2,940	4,905	8,825
700	110	570	1,135	1,705	2,840	4,730	8,515
750	95	530	1,065	1,595	2,660	4,430	7,970
800	80	510	1,015	1,525	2,540	4,230	7,610
850	65	485	975	1,460	2,435	4,060	7,305
900	50	450	900	1,350	2,245	3,745	6,740
950	35	280	560	845	1,405	2,345	4,215
1000	20	165	330	495	825	1,370	2,470

B – Special Class

Temperature, °F	Working Pressures by Class, psig						
	150	300	600	900	1500	2500	4500
−20 to 100	265	695	1,395	2,090	3,480	5,805	10,445
200	265	695	1,395	2,090	3,480	5,805	10,445
300	265	695	1,395	2,090	3,480	5,805	10,445
400	265	695	1,395	2,090	3,480	5,805	10,445
500	265	695	1,395	2,090	3,480	5,805	10,445
600	265	695	1,395	2,090	3,480	5,805	10,445
650	265	695	1,395	2,090	3,480	5,805	10,445
700	265	695	1,395	2,090	3,480	5,805	10,445
750	265	695	1,395	2,090	3,480	5,805	10,445
800	265	695	1,395	2,090	3,480	5,805	10,445
850	260	680	1,355	2,030	3,385	5,645	10,160
900	225	585	1,175	1,760	2,935	4,895	8,805
950	135	350	705	1,055	1,755	2,930	5,270
1000	80	205	410	615	1,030	1,715	3,085

Table VII-2-1.6 Ratings For Group 1.6 Materials

A 387 Gr. 2 Cl. 1 A 387 Gr. 2 Cl. 2 A 691 Gr. $\frac{1}{2}$Cr

A – Standard Class

Temperature, °F	Working Pressures by Class, psig						
	150	300	600	900	1500	2500	4500
−20 to 100	225	590	1,180	1,770	2,945	4,910	8,840
200	225	590	1,185	1,775	2,955	4,930	8,870
300	225	590	1,185	1,775	2,955	4,930	8,870
400	200	590	1,145	1,715	2,860	4,765	8,580
500	170	575	1,105	1,655	2,755	4,595	8,270
600	140	555	1,065	1,600	2,665	4,440	7,990
650	125	545	1,045	1,570	2,615	4,355	7,840
700	110	535	1,025	1,535	2,560	4,270	7,685
750	95	525	630	1,420	2,365	3,945	7,095
800	80	510	630	1,420	2,365	3,945	7,095
850	65	485	615	1,380	2,295	3,830	6,890
900	50	450	590	1,325	2,210	3,685	6,635
950	35	315	420	630	1,575	2,630	4,730
1000	20	200	270	405	1,010	1,685	3,035

B – Special Class

Temperature, °F	Working Pressures by Class, psig						
	150	300	600	900	1500	2500	4500
−20 to 100	225	590	1,180	1,770	2,945	4,910	8,840
200	225	590	1,180	1,770	2,945	4,910	8,840
300	225	590	1,180	1,770	2,945	4,910	8,840
400	225	590	1,180	1,770	2,945	4,910	8,840
500	225	590	1,180	1,770	2,945	4,910	8,840
600	225	590	1,180	1,770	2,945	4,910	8,840
650	225	590	1,180	1,770	2,945	4,910	8,840
700	225	590	1,180	1,770	2,945	4,910	8,840
750	225	590	1,180	1,770	2,945	4,910	8,840
800	225	590	1,180	1,770	2,945	4,910	8,840
850	225	590	1,180	1,770	2,945	4,910	8,840
900	230	600	1,200	1,800	3,000	5,000	9,000
950	150	395	790	1,185	1,970	3,285	5,915
1000	95	255	505	760	1,265	2,105	3,795

Table VII-2-1.7 Ratings For Group 1.7 Materials

A 691 Gr. CM 75	A 182 Gr. F2 (1)	A 217 Gr. WC4 (1)(2)	A 217 Gr. WC5 (2)

NOTES:
(1) Not to be used over 1000°F.
(2) Use normalized and tempered material only.

A – Standard Class

Temperature, °F	Working Pressures by Class, psig						
	150	300	600	900	1500	2500	4500
−20 to 100	290	750	1,500	2,250	3,750	6,250	11,250
200	260	750	1,500	2,250	3,750	6,250	11,250
300	230	730	1,455	2,185	3,640	6,070	10,925
400	200	705	1,410	2,115	3,530	5,880	10,585
500	170	665	1,330	1,995	3,325	5,540	9,965
600	140	605	1,210	1,815	3,025	5,040	9,070
650	125	590	1,175	1,765	2,940	4,905	8,825
700	110	570	1,135	1,705	2,840	4,730	8,515
750	95	530	1,065	1,595	2,660	4,430	7,970
800	80	510	1,015	1,525	2,540	4,230	7,610
850	65	485	975	1,460	2,435	4,060	7,305
900	50	450	900	1,350	2,245	3,745	6,740
950	35	315	630	945	1,575	2,630	4,730
1000	20	200	405	605	1,010	1,685	3,035
1050	20	160	315	475	790	1,315	2,365

GENERAL NOTE:
(a) Flanged end valve ratings terminate at 1000°F.

B – Special Class

Temperature, °F	Working Pressures by Class, psig						
	150	300	600	900	1500	2500	4500
−20 to 100	290	750	1,500	2,250	3,750	6,250	11,250
200	290	750	1,500	2,250	3,750	6,250	11,250
300	290	750	1,500	2,250	3,750	6,250	11,250
400	290	750	1,500	2,250	3,750	6,250	11,250
500	290	750	1,500	2,250	3,750	6,250	11,250
600	290	750	1,500	2,250	3,750	6,250	11,250
650	290	750	1,500	2,250	3,750	6,250	11,250
700	280	735	1,465	2,200	3,665	6,110	10,995
750	280	730	1,460	2,185	3,645	6,070	10,930
800	275	720	1,440	2,160	3,600	6,000	10,800
850	260	680	1,355	2,030	3,385	5,645	10,160
900	230	600	1,200	1,800	3,000	5,000	9,000
950	150	395	790	1,185	1,970	3,285	5,915
1000	95	255	505	760	1,265	2,105	3,795
1050	75	195	395	590	985	1,645	2,955

Table VII-2-1.8 Ratings For Group 1.8 Materials

A 335 Gr. P22 (1)	A 387 Gr. 11 Cl. 1 (1)	A 387 Gr. 12 Cl. 2 (1)	A 691 Gr. 1¼ Cr (1)
A 369 Gr. FP22 (1)		A 387 Gr. 12 Cl. 1 (1)	A 691 Gr. 2¼ Cr (1)

NOTE:
(1) Permissible, but not recommended for prolonged use above 1100°F.

A – Standard Class

Temperature, °F	Working Pressures by Class, psig						
	150	300	600	900	1500	2500	4500
−20 to 100	235	615	1,235	1,850	3,085	5,145	9,255
200	220	575	1,150	1,730	2,880	4,800	8,640
300	215	560	1,120	1,680	2,800	4,665	8,395
400	200	555	1,105	1,660	2,765	4,610	8,300
500	170	555	1,105	1,660	2,765	4,610	8,300
600	140	555	1,105	1,660	2,765	4,610	8,300
650	125	555	1,105	1,660	2,765	4,610	8,300
700	110	545	1,085	1,630	2,715	4,525	8,145
750	95	530	1,065	1,595	2,660	4,430	7,970
800	80	510	1,015	1,525	2,540	4,230	7,610
850	65	485	975	1,460	2,435	4,060	7,305
900	50	450	900	1,350	2,245	3,745	6,740
950	35	320	640	955	1,595	2,655	4,785
1000	20	215	430	650	1,080	1,800	3,240
1050	20	145	290	430	720	1,200	2,160
1100	20	95	190	290	480	800	1,440
1150	20	60	125	185	310	515	925
1200	15	40	75	115	190	315	565

GENERAL NOTE:
(a) Flanged end valve ratings terminate at 1000°F.

B – Special Class

Temperature, °F	Working Pressures by Class, psig						
	150	300	600	900	1500	2500	4500
−20 to 100	245	645	1,285	1,930	3,215	5,355	9,645
200	245	640	1,285	1,925	3,210	5,350	9,625
300	240	625	1,245	1,870	3,120	5,195	9,355
400	240	625	1,245	1,870	3,120	5,195	9,355
500	240	625	1,245	1,870	3,120	5,195	9,355
600	240	625	1,245	1,870	3,120	5,195	9,355
650	240	625	1,245	1,870	3,120	5,195	9,355
700	240	625	1,245	1,870	3,120	5,195	9,355
750	265	695	1,390	2,080	3,470	5,780	10,405
800	265	675	1,350	2,025	3,375	5,625	10,125
850	250	655	1,315	1,970	3,280	5,470	9,845
900	225	585	1,165	1,750	2,915	4,855	8,745
950	155	400	795	1,195	1,995	3,320	5,980
1000	105	270	540	810	1,350	2,250	4,050
1050	70	180	360	540	900	1,500	2,700
1100	45	120	240	360	600	1,000	1,800
1150	30	75	155	230	385	645	1,155
1200	20	45	95	140	235	395	705

Table VII-2-1.9 Ratings For Group 1.9 Materials

A 182 Gr. F11 Cl. 2 (1)(2)	A 217 Gr. WC6 (1)(3)	A 387 Gr. 11, Cl. 2 (2)	A 739 Gr. B11 (2)

NOTES:
(1) Use normalized and tempered material only.
(2) Permissible, but not recommended for prolonged use above 1100°F.
(3) Not to be used over 1100°F.

A – Standard Class

Temperature, °F	Working Pressures by Class, psig						
	150	300	600	900	1500	2500	4500
−20 to 100	290	750	1,500	2,250	3,750	6,250	11,250
200	260	750	1,500	2,250	3,750	6,250	11,250
300	230	720	1,445	2,165	3,610	6,015	10,830
400	200	695	1,385	2,080	3,465	5,775	10,400
500	170	665	1,330	1,995	3,325	5,540	9,965
600	140	605	1,210	1,815	3,025	5,040	9,070
650	125	590	1,175	1,765	2,940	4,905	8,825
700	110	570	1,135	1,705	2,840	4,730	8,515
750	95	530	1,065	1,595	2,660	4,430	7,970
800	80	510	1,015	1,525	2,540	4,230	7,610
850	65	485	975	1,460	2,435	4,060	7,305
900	50	450	900	1,350	2,245	3,745	6,740
950	35	320	640	955	1,595	2,655	4,785
1000	20	215	430	650	1,080	1,800	3,240
1050	20	145	290	430	720	1,200	2,160
1100	20	95	190	290	480	800	1,440
1150	20	65	130	195	325	545	975
1200	15	40	80	125	205	345	615

GENERAL NOTE:
(a) Flanged end valve ratings terminate at 1000°F.

B – Special Class

Temperature, °F	Working Pressures by Class, psig						
	150	300	600	900	1500	2500	4500
−20 to 100	290	750	1,500	2,250	3,750	6,250	11,250
200	290	750	1,500	2,250	3,750	6,250	11,250
300	290	750	1,500	2,250	3,750	6,250	11,250
400	290	750	1,500	2,250	3,750	6,250	11,250
500	290	750	1,500	2,250	3,750	6,250	11,250
600	290	750	1,500	2,250	3,750	6,250	11,250
650	290	750	1,500	2,250	3,750	6,250	11,250
700	280	735	1,465	2,200	3,665	6,110	10,995
750	280	730	1,460	2,185	3,645	6,070	10,930
800	275	720	1,440	2,160	3,600	6,000	10,800
850	260	680	1,355	2,030	3,385	5,645	10,160
900	225	585	1,175	1,760	2,935	4,895	8,805
950	155	400	795	1,195	1,995	3,320	5,980
1000	105	270	540	810	1,350	2,250	4,050
1050	70	180	360	540	900	1,500	2,700
1100	45	120	240	360	600	1,000	1,800
1150	30	80	165	245	405	680	1,220
1200	20	50	105	155	255	430	770

Table VII-2-1.10 Ratings For Group 1.10 Materials

A 182 Gr. F22 Cl. 3 (1)	A 217 Gr. WC9 (2)(3)	A 387 Gr. 22 Cl. 2 (1)	A 739 Gr. B22 (1)

NOTES:
(1) Permissible, but not recommended for prolonged use above 1100°F.
(2) Use normalized and tempered material only.
(3) Not to be used over 1100°F.

A – Standard Class

Temperature, °F	Working Pressures by Class, psig						
	150	300	600	900	1500	2500	4500
−20 to 100	290	750	1,500	2,250	3,750	6,250	11,250
200	260	750	1,500	2,250	3,750	6,250	11,250
300	230	730	1,455	2,185	3,640	6,070	10,925
400	200	705	1,410	2,115	3,530	5,880	10,585
500	170	665	1,330	1,995	3,325	5,540	9,965
600	140	605	1,210	1,815	3,025	5,040	9,070
650	125	590	1,175	1,765	2,940	4,905	8,825
700	110	570	1,135	1,705	2,840	4,730	8,515
750	95	530	1,065	1,595	2,660	4,430	7,970
800	80	510	1,015	1,525	2,540	4,230	7,610
850	65	485	975	1,460	2,435	4,060	7,305
900	50	450	900	1,350	2,245	3,745	6,740
950	35	385	755	1,160	1,930	3,220	5,795
1000	20	265	535	800	1,335	2,230	4,010
1050	20	175	350	525	875	1,455	2,625
1100	20	110	220	330	550	915	1,645
1150	20	70	135	205	345	570	1,030
1200	15	40	80	125	205	345	615

GENERAL NOTE:
(a) Flanged end valve ratings terminate at 1000°F.

B – Special Class

Temperature, °F	Working Pressures by Class, psig						
	150	300	600	900	1500	2500	4500
−20 to 100	290	750	1,500	2,250	3,750	6,250	11,250
200	290	750	1,500	2,250	3,750	6,250	11,250
300	285	740	1,480	2,220	3,695	6,160	11,090
400	280	730	1,455	2,185	3,640	6,065	10,915
500	280	725	1,450	2,175	3,620	6,035	10,865
600	275	720	1,440	2,165	3,605	6,010	10,815
650	275	715	1,430	2,145	3,580	5,965	10,735
700	270	705	1,415	2,120	3,535	5,895	10,605
750	270	705	1,415	2,120	3,535	5,895	10,605
800	270	705	1,415	2,120	3,535	5,895	10,605
850	260	680	1,355	2,030	3,385	5,645	10,160
900	230	600	1,200	1,800	3,000	5,000	9,000
950	180	470	945	1,415	2,360	3,930	7,070
1000	130	335	670	1,005	1,670	2,785	5,015
1050	85	220	435	655	1,095	1,820	3,280
1100	55	135	275	410	685	1,145	2,055
1150	35	85	170	255	430	715	1,285
1200	20	50	105	155	255	430	770

Table 2-1.11 Ratings for Group 1.11 Materials

A 182 Gr. F21 (1)	A 302 Gr. B (2)	A 302 Gr. D (2)	A 537 Cl. 2 (3)
A 204 Gr. C (4)	A 302 Gr. C (2)	A 387 Gr. 21 Cl. 2 (1)	A 302 Gr. A (2)

NOTES:

(1) Permissible, but not recommended for prolonged use above 1100°F.

(2) Upon prolonged exposure to temperatures above 875°F, the carbide phase of carbon-molybdenum steel may be converted to graphite. Permissible, but not recommended for prolonged use above 1000°F.

(3) Not to be used over 700°F.

(4) Upon prolonged exposure to temperatures above 875°F, the carbide phase of steel may be converted to graphite. Permissible, but not recommended for prolonged use above 875°F.

A – Standard Class

Temperature, °F	Working Pressures by Class, psig						
	150	300	600	900	1500	2500	4500
−20 to 100	290	750	1,500	2,250	3,750	6,250	11,250
200	260	750	1,500	2,250	3,750	6,250	11,250
300	230	730	1,455	2,185	3,640	6,070	10,925
400	200	705	1,410	2,115	3,530	5,880	10,585
500	170	665	1,330	1,995	3,325	5,540	9,965
600	140	605	1,210	1,815	3,025	5,040	9,070
650	125	590	1,175	1,765	2,940	4,905	8,825
700	110	570	1,135	1,705	2,840	4,730	8,515
750	95	530	1,065	1,595	2,660	4,430	7,970
800	80	510	1,015	1,525	2,540	4,230	7,610
850	65	485	975	1,460	2,435	4,060	7,305
900	50	450	900	1,345	2,245	3,745	6,735
950	35	280	560	845	1,405	2,345	4,215
1000	20	165	330	495	825	1,370	2,470
1050	20	165	330	495	825	1,370	2,470
1100	20	110	220	330	550	915	1,645
1150	20	80	165	245	410	685	1,235
1200	15	45	90	135	225	370	670

GENERAL NOTE:

(a) Flanged end valve ratings terminate at 1000°F.

B – Special Class

Temperature, °F	Working Pressures by Class, psig						
	150	300	600	900	1500	2500	4500
−20 to 100	290	750	1,500	2,250	3,750	6,250	11,250
200	290	750	1,500	2,250	3,750	6,250	11,250
300	290	750	1,500	2,250	3,750	6,250	11,250
400	290	750	1,500	2,250	3,750	6,250	11,250
500	290	750	1,500	2,250	3,750	6,250	11,250
600	290	750	1,500	2,250	3,750	6,250	11,250
650	290	750	1,500	2,250	3,750	6,250	11,250
700	280	735	1,465	2,200	3,665	6,110	10,995
750	280	730	1,460	2,185	3,645	6,070	10,930
800	275	720	1,440	2,160	3,600	6,000	10,800
850	260	680	1,355	2,030	3,385	5,645	10,160
900	215	560	1,125	1,685	2,805	4,680	8,420
950	135	350	705	1,055	1,755	2,930	5,270
1000	80	205	410	615	1,030	1,715	3,085
1050	80	210	420	630	1,050	1,750	3,150
1100	55	135	275	410	685	1,145	2,055
1150	40	105	205	310	515	855	1,545
1200	20	55	110	165	280	465	835

Table VII-2-1.12 Ratings For Group 1.12 Materials

A 335 Gr. P5	A 369 Gr. FP5	A 387 Gr. 5 Cl. 2	A 691 Gr. 5Cr
A 335 Gr. P5b	A 387 Gr. Cl. 1		

A – Standard Class

Temperature, °F	Working Pressures by Class, psig						
	150	300	600	900	1500	2500	4500
−20 to 100	235	615	1,235	1,850	3,085	5,145	9,255
200	215	555	1,115	1,670	2,785	4,645	8,360
300	205	535	1,075	1,610	2,685	4,475	8,055
400	200	530	1,060	1,590	2,655	4,425	7,960
500	170	525	1,055	1,580	2,635	4,390	7,900
600	140	520	1,035	1,555	2,590	4,320	7,775
650	125	510	1,025	1,535	2,560	4,270	7,685
700	110	505	1,010	1,510	2,520	4,200	7,560
750	95	490	985	1,475	2,460	4,095	7,375
800	80	475	950	1,425	2,375	3,960	7,130
850	65	455	915	1,370	2,285	3,805	6,850
900	50	375	745	1,120	1,870	3,115	5,605
950	35	275	550	825	1,370	2,285	4,115
1000	20	200	400	595	995	1,655	2,985
1050	20	145	290	430	720	1,200	2,160
1100	20	100	200	300	495	830	1,490
1150	20	60	125	185	310	515	925
1200	15	35	70	105	170	285	515

GENERAL NOTE:

(a) Flanged end valve ratings terminate at 1000°F.

B – Special Class

Temperature, °F	Working Pressures by Class, psig						
	150	300	600	900	1500	2500	4500
−20 to 100	245	645	1,285	1,930	3,215	5,355	9,645
200	245	640	1,285	1,925	3,210	5,350	9,625
300	240	625	1,245	1,870	3,115	5,190	9,340
400	235	620	1,235	1,855	3,090	5,150	9,275
500	235	615	1,230	1,850	3,080	5,135	9,240
600	235	610	1,215	1,825	3,040	5,065	9,115
650	230	600	1,195	1,795	2,990	4,980	8,970
700	225	585	1,170	1,755	2,925	4,875	8,775
750	225	585	1,170	1,755	2,925	4,875	8,775
800	225	585	1,170	1,755	2,925	4,875	8,775
850	225	585	1,170	1,755	2,925	4,875	8,775
900	180	465	935	1,400	2,335	3,895	7,005
950	130	345	685	1,030	1,715	2,855	5,145
1000	95	250	495	745	1,245	2,070	3,730
1050	70	180	360	540	900	1,500	2,700
1100	50	125	250	375	620	1,035	1,865
1150	30	75	155	230	385	645	1,155
1200	15	45	85	130	215	355	645

Table VII-2-1.13 Ratings For Group 1.13 Materials

A 182 Gr. F5a	A 217 Gr. C5 (1)

NOTE:
(1) Use normalized and tempered material only.

A – Standard Class

Temperature, °F	Working Pressures by Class, psig						
	150	300	600	900	1500	2500	4500
−20 to 100	290	750	1,500	2,250	3,750	6,250	11,250
200	260	750	1,500	2,250	3,750	6,250	11,250
300	230	730	1,455	2,185	3,640	6,070	10,925
400	200	705	1,410	2,115	3,530	5,880	10,585
500	170	665	1,330	1,995	3,325	5,540	9,965
600	140	605	1,210	1,815	3,025	5,040	9,070
650	125	590	1,175	1,765	2,940	4,905	8,825
700	110	570	1,135	1,705	2,840	4,730	8,515
750	95	530	1,065	1,595	2,660	4,430	7,970
800	80	510	1,015	1,525	2,540	4,230	7,610
850	65	485	975	1,460	2,435	4,060	7,305
900	50	375	745	1,120	1,870	3,115	5,605
950	35	275	550	825	1,370	2,285	4,115
1000	20	200	400	595	995	1,655	2,985
1050	20	145	290	430	720	1,200	2,160
1100	20	100	200	300	495	830	1,490
1150	20	60	125	185	310	515	925
1200	15	35	70	105	170	285	515

GENERAL NOTE:
(a) Flanged end valve ratings terminate at 1000°F.

B – Special Class

Temperature, °F	Working Pressures by Class, psig						
	150	300	600	900	1500	2500	4500
−20 to 100	290	750	1,500	2,250	3,750	6,250	11,250
200	290	750	1,500	2,250	3,750	6,250	11,250
300	290	750	1,500	2,250	3,750	6,250	11,250
400	290	750	1,500	2,250	3,750	6,250	11,250
500	290	750	1,500	2,250	3,750	6,250	11,250
600	290	750	1,500	2,250	3,750	6,250	11,250
650	290	750	1,500	2,250	3,750	6,250	11,250
700	280	735	1,465	2,200	3,665	6,110	10,995
750	280	730	1,460	2,185	3,645	6,070	10,930
800	275	720	1,440	2,160	3,600	6,000	10,800
850	260	615	1,225	1,840	3,065	5,105	9,195
900	230	465	935	1,400	2,335	3,895	7,005
950	170	345	685	1,030	1,715	2,855	5,145
1000	125	250	495	745	1,245	2,070	3,730
1050	90	180	360	540	900	1,500	2,700
1100	60	125	250	375	620	1,035	1,865
1150	40	75	155	230	385	645	1,155
1200	20	45	85	130	215	355	645

Table VII-2-1.14 Ratings For Group 1.14 Materials

A 182 Gr. F9	A 217 Gr. C12 (1)

NOTE:
(1) Use normalized and tempered material only.

A – Standard Class

Temperature, °F	Working Pressures by Class, psig						
	150	300	600	900	1500	2500	4500
−20 to 100	290	750	1,500	2,250	3,750	6,250	11,250
200	260	750	1,500	2,250	3,750	6,250	11,250
300	230	730	1,455	2,185	3,640	6,070	10,925
400	200	705	1,410	2,115	3,530	5,880	10,585
500	170	665	1,330	1,995	3,325	5,540	9,965
600	140	605	1,210	1,815	3,025	5,040	9,070
650	125	590	1,175	1,765	2,940	4,905	8,825
700	110	570	1,135	1,705	2,840	4,730	8,515
750	95	530	1,065	1,595	2,660	4,430	7,970
800	80	510	1,015	1,525	2,540	4,230	7,610
850	65	485	975	1,460	2,435	4,060	7,305
900	50	450	900	1,350	2,245	3,745	6,740
950	35	375	755	1,130	1,885	3,145	5,655
1000	20	255	505	760	1,270	2,115	3,805
1050	20	170	345	515	855	1,430	2,570
1100	20	115	225	340	565	945	1,695
1150	20	75	150	225	375	630	1,130
1200	20	50	105	155	255	430	770

GENERAL NOTE:
(a) Flanged end valve ratings terminate at 1000°F.

B – Special Class

Temperature, °F	Working Pressures by Class, psig						
	150	300	600	900	1500	2500	4500
−20 to 100	290	750	1,500	2,250	3,750	6,250	11,250
200	290	750	1,500	2,250	3,750	6,250	11,250
300	290	750	1,500	2,250	3,750	6,250	11,250
400	290	750	1,500	2,250	3,750	6,250	11,250
500	290	750	1,500	2,250	3,750	6,250	11,250
600	290	750	1,500	2,250	3,750	6,250	11,250
650	290	750	1,500	2,250	3,750	6,250	11,250
700	280	735	1,465	2,200	3,665	6,110	10,995
750	280	730	1,460	2,185	3,645	6,070	10,930
800	275	720	1,440	2,160	3,600	6,000	10,800
850	260	680	1,355	2,030	3,385	5,645	10,160
900	230	600	1,200	1,800	3,000	5,000	9,000
950	180	470	945	1,415	2,355	3,930	7,070
1000	120	315	635	950	1,585	2,645	4,755
1050	80	215	430	645	1,070	1,785	3,215
1100	55	140	285	425	705	1,180	2,120
1150	35	95	190	285	470	785	1,415
1200	25	65	130	195	320	535	965

Table VII-2-1.15 Ratings For Group 1.15 Materials

A 182 Gr. F91 | A 217 Gr. C12A | A 387 Gr. 91 Cl.2 | A 335 Gr. P91

A – Standard Class

Temperature, °F	Working Pressures by Class, psig						
	150	300	600	900	1500	2500	4500
−20 to 100	290	750	1,500	2,250	3,750	6,250	11,250
200	260	750	1,500	2,250	3,750	6,250	11,250
300	230	730	1,455	2,185	3,640	6,070	10,925
400	200	705	1,410	2,115	3,530	5,880	10,585
500	170	665	1,330	1,995	3,325	5,540	9,965
600	140	605	1,210	1,815	3,025	5,040	9,070
650	125	590	1,175	1,765	2,940	4,905	8,825
700	110	570	1,135	1,705	2,840	4,730	8,515
750	95	530	1,065	1,595	2,660	4,430	7,970
800	80	510	1,015	1,525	2,540	4,230	7,610
850	65	485	975	1,460	2,435	4,060	7,305
900	50	450	900	1,350	2,245	3,745	6,740
950	35	385	775	1,160	1,930	3,220	5,795
1000	20	365	725	1,090	1,820	3,030	5,450
1050	20	360	720	1,080	1,800	3,000	5,400
1100	20	300	605	905	1,510	2,515	4,525
1150	20	225	445	670	1,115	1,855	3,345
1200	20	145	290	430	720	1,200	2,160

GENERAL NOTE:

(a) Flanged end valve ratings terminate at 1000°F.

B – Special Class

Temperature, °F	Working Pressures by Class, psig						
	150	300	600	900	1500	2500	4500
−20 to 100	290	750	1,500	2,250	3,750	6,250	11,250
200	290	750	1,500	2,250	3,750	6,250	11,250
300	290	750	1,500	2,250	3,750	6,250	11,250
400	290	750	1,500	2,250	3,750	6,250	11,250
500	290	750	1,500	2,250	3,750	6,250	11,250
600	290	750	1,500	2,250	3,750	6,250	11,250
650	290	750	1,500	2,250	3,750	6,250	11,250
700	280	735	1,465	2,200	3,665	6,110	10,995
750	280	730	1,460	2,185	3,645	6,070	10,930
800	275	720	1,440	2,160	3,600	6,000	10,800
850	260	680	1,355	2,030	3,385	5,645	10,160
900	230	600	1,200	1,800	3,000	5,000	9,000
950	180	470	945	1,415	2,360	3,930	7,070
1000	160	420	840	1,260	2,105	3,505	6,310
1050	160	420	840	1,260	2,105	3,505	6,310
1100	145	375	755	1,130	1,885	3,145	5,655
1150	105	280	555	835	1,395	2,320	4,180
1200	70	180	360	540	900	1,500	2,700

Table VII-2-1.16 Ratings For Group 1.16 Materials

A 335 Gr. P1 (1)(3)	A 335 Gr. P12 (2)	A 369 Gr. FP11 (2)	A 387 Gr. 12 Cl. 1 (2)
A 335 Gr. P11 (2)	A 369 Gr. FP1 (1)(3)	A 369 Gr. FP12 (2)	A 691 Gr. 1Cr (2)(4)

NOTE:
(1) Upon prolonged exposure to temperatures above 875°F, the carbide phase of steel may be converted to graphite. Permissible but not recommended for prolonged usage above 875°F.
(2) Permissible but not recommended for prolonged usage above 1100°F.
(3) Not to be used over 1000°F.
(4) Use normalized and tempered material only.

A – Standard Class

Temperature, °F	Working Pressures by Class, psig						
	150	300	600	900	1500	2500	4500
−20 to 100	225	590	1,180	1,770	2,945	4,910	8,840
200	220	570	1,140	1,710	2,850	4,750	8,545
300	205	540	1,080	1,625	2,705	4,510	8,115
400	200	520	1,040	1,560	2,600	4,335	7,805
500	170	500	1,005	1,505	2,510	4,185	7,530
600	140	485	965	1,450	2,415	4,030	7,250
650	125	475	950	1,425	2,375	3,960	7,130
700	110	465	930	1,395	2,325	3,875	6,975
750	95	455	915	1,370	2,285	3,805	6,850
800	80	445	890	1,335	2,220	3,705	6,665
850	65	430	865	1,295	2,160	3,600	6,480
900	50	420	840	1,260	2,100	3,495	6,295
950	35	280	560	845	1,405	2,345	4,215
1000	20	165	330	495	825	1,370	2,470
1050	20	145	290	430	720	1,200	2,160
1100	20	95	190	290	480	800	1,440
1150	20	60	125	185	310	515	925
1200	15	40	75	115	190	315	565

GENERAL NOTE:
(a) Flanged end valve ratings terminate at 1000°F.

B – Special Class

Temperature, °F	Working Pressures by Class, psig						
	150	300	600	900	1500	2500	4500
−20 to 100	225	590	1,180	1,770	2,945	4,910	8,840
200	220	580	1,155	1,735	2,895	4,820	8,680
300	215	565	1,135	1,700	2,835	4,725	8,500
400	215	565	1,135	1,700	2,835	4,725	8,500
500	215	565	1,135	1,700	2,835	4,725	8,500
600	215	565	1,135	1,700	2,835	4,725	8,500
650	215	565	1,135	1,700	2,835	4,725	8,500
700	215	565	1,135	1,700	2,835	4,725	8,500
750	215	565	1,135	1,700	2,835	4,725	8,500
800	215	565	1,135	1,700	2,835	4,725	8,500
850	215	565	1,135	1,700	2,835	4,725	8,500
900	215	560	1,120	1,680	2,800	4,665	8,395
950	135	350	705	1,055	1,755	2,930	5,270
1000	80	205	410	615	1,030	1,715	3,085
1050	75	195	385	580	965	1,605	2,895
1100	45	120	240	360	600	1,000	1,800
1150	30	75	155	230	385	645	1,155
1200	20	45	95	140	235	395	705

Table VII-2-1.17 Ratings For Group 1.17 Materials

A 182 Gr. F12 Cl. 2 (1)(2)	A 182 Gr. F5

NOTES:
(1) Use normalized and tempered material only.
(2) Permissible but not recommended for prolonged usage above 1100°F.

A – Standard Class

Temperature, °F	Working Pressures by Class, psig						
	150	300	600	900	1500	2500	4500
−20 to 100	290	750	1,500	2,250	3,750	6,250	11,250
200	260	735	1,470	2,210	3,680	6,135	11,040
300	230	700	1,400	2,100	3,495	5,830	10,490
400	200	670	1,335	2,005	3,345	5,570	10,030
500	170	645	1,290	1,940	3,230	5,385	9,690
600	140	605	1,210	1,815	3,025	5,040	9,070
650	125	590	1,175	1,765	2,940	4,905	8,825
700	110	570	1,135	1,705	2,840	4,730	8,515
750	95	530	1,065	1,595	2,660	4,430	7,970
800	80	510	1,015	1,525	2,540	4,230	7,610
850	65	485	975	1,460	2,435	4,060	7,305
900	50	375	745	1,120	1,870	3,115	5,605
950	35	275	550	825	1,370	2,285	4,115
1000	20	200	400	595	995	1,655	2,985
1050	20	145	290	430	720	1,200	2,160
1100	20	95	190	290	480	800	1,440
1150	20	60	125	185	310	515	925
1200	15	35	70	105	170	285	515

GENERAL NOTE:
(a) Flanged end valve ratings terminate at 1000°F.

B – Special Class

Temperature, °F	Working Pressures by Class, psig						
	150	300	600	900	1500	2500	4500
−20 to 100	290	750	1,500	2,250	3,750	6,250	11,250
200	280	735	1,470	2,210	3,680	6,135	11,040
300	275	720	1,440	2,165	3,605	6,010	10,815
400	275	720	1,440	2,165	3,605	6,010	10,815
500	275	720	1,440	2,155	3,595	5,990	10,785
600	270	710	1,415	2,125	3,540	5,900	10,625
650	265	695	1,395	2,090	3,485	5,810	10,460
700	260	685	1,365	2,050	3,415	5,690	10,240
750	260	685	1,365	2,050	3,415	5,690	10,240
800	260	685	1,365	2,050	3,415	5,690	10,240
850	235	615	1,225	1,840	3,065	5,105	9,195
900	180	465	935	1,400	2,335	3,895	7,005
950	130	345	685	1,030	1,715	2,855	5,145
1000	95	250	495	745	1,245	2,070	3,730
1050	70	180	360	540	900	1,500	2,700
1100	45	120	240	360	600	1,000	1,800
1150	30	75	155	230	385	645	1,155
1200	15	45	85	130	215	355	645

Table VII-2-2.1 Ratings For Group 2.1 Materials

A 182 Gr. F304 (1)	A 312 Gr. TP304 (1)	A 358 Gr. 304 (1)	A 430 Gr. FP304H
A 182 Gr. F304H	A 312 Gr. TP304H	A 376 Gr. TP304 (1)	A 479 Gr. 304 (1)
A 240 Gr. 304 (1)	A 351 Gr. CF3 (2)	A 376 Gr. TP304H	A 479 Gr. 304H
A 240 Gr. 304H	A 351 Gr. CF8 (1)	A 430 Gr. FP304 (1)	

NOTES:
(1) At temperatures over 1000°F, use only when the carbon content is 0.04% or higher.
(2) Not to be used over 800°F.

A – Standard Class

Temperature, °F	Working Pressures by Class, psig						
	150	300	600	900	1500	2500	4500
−20 to 100	275	720	1,440	2,160	3,600	6,000	10,800
200	230	600	1,200	1,800	3,000	5,000	9,000
300	205	540	1,075	1,615	2,690	4,480	8,065
400	190	495	995	1,490	2,485	4,140	7,450
500	170	465	930	1,395	2,330	3,880	6,985
600	140	440	885	1,325	2,210	3,680	6,625
650	125	430	865	1,295	2,160	3,600	6,480
700	110	420	845	1,265	2,110	3,520	6,335
750	95	415	825	1,240	2,065	3,440	6,190
800	80	405	810	1,215	2,030	3,380	6,085
850	65	395	790	1,190	1,980	3,300	5,940
900	50	390	780	1,165	1,945	3,240	5,830
950	35	380	765	1,145	1,910	3,180	5,725
1000	20	355	710	1,065	1,770	2,950	5,315
1050	20	325	650	975	1,630	2,715	4,885
1100	20	255	515	770	1,285	2,145	3,855
1150	20	205	410	615	1,030	1,715	3,085
1200	20	165	330	495	825	1,370	2,470
1250	20	135	265	400	670	1,115	2,005
1300	20	115	225	340	565	945	1,695
1350	20	95	185	280	465	770	1,390
1400	20	75	150	225	380	630	1,130
1450	20	60	115	175	290	485	875
1500	15	40	85	125	205	345	620

GENERAL NOTE:
(a) Flanged end valve ratings terminate at 1000°F.

Table VII-2-2.1 Ratings For Group 2.1 Materials (Cont'd)

A 182 Gr. F304 (1)	A 312 Gr. TP304 (1)	A 358 Gr. 304 (1)	A 430 Gr. FP304H
A 182 Gr. F304H	A 312 Gr. TP304H	A 376 Gr. TP304 (1)	A 479 Gr. 304 (1)
A 240 Gr. 304 (1)	A 351 Gr. CF3 (2)	A 376 Gr. TP304H	A 479 Gr. 304H
A 240 Gr. 304H	A 351 Gr. CF8 (1)	A 430 Gr. FP304 (1)	

NOTES:
(1) At temperatures over 1000°F, use only when the carbon content is 0.04% or higher.
(2) Not to be used over 800°F.

B – Special Class

Temperature, °F	Working Pressures by Class, psig						
	150	300	600	900	1500	2500	4500
−20 to 100	290	750	1,500	2,250	3,750	6,250	11,250
200	255	670	1,340	2,010	3,350	5,580	10,045
300	230	600	1,200	1,800	3,000	5,000	9,000
400	215	555	1,110	1,665	2,770	4,620	8,315
500	200	520	1,040	1,560	2,600	4,330	7,795
600	190	495	985	1,480	2,465	4,105	7,395
650	185	480	965	1,445	2,410	4,020	7,230
700	180	470	945	1,415	2,355	3,930	7,070
750	175	460	920	1,380	2,305	3,840	6,910
800	175	455	905	1,360	2,265	3,770	6,790
850	170	440	885	1,325	2,210	3,685	6,630
900	165	435	870	1,300	2,170	3,615	6,510
950	165	425	850	1,280	2,130	3,550	6,390
1000	160	415	830	1,245	2,075	3,460	6,230
1050	155	405	815	1,220	2,035	3,395	6,105
1100	125	320	645	965	1,605	2,680	4,820
1150	100	255	515	770	1,285	2,145	3,855
1200	80	205	410	615	1,030	1,715	3,085
1250	65	165	335	500	835	1,395	2,505
1300	55	140	285	425	705	1,180	2,120
1350	45	115	230	345	580	965	1,735
1400	35	95	190	285	470	785	1,415
1450	30	75	145	220	365	610	1,095
1500	20	50	105	155	260	430	770

Table VII-2-2.2 Ratings For Group 2.2 Materials

A 182 Gr. F316 (1)	A 240 Gr. 317 (1)	A 351 Gr. CF3A (2)	A 376 Gr. TP316 (1)
A 182 Gr. F316H	A 240 Gr. 317H	A 351 Gr. CF8M (1)	A 376 Gr. TP316H
A 182 Gr. F317 (1)	A 312 Gr. TP316 (1)	A 351 Gr. CF8A (2)	A 430 Gr. FP316 (1)
A 182 Gr. F317H	A 312 Gr. TP316H	A 351 Gr. CF3M (1)	A 430 Gr. FP316H
A 240 Gr. 316 (1)	A 312 Gr. TP317 (1)	A 351 Gr. CG8MF (4)	A 479 Gr. 316 (1)
A 240 Gr. 316H	A 312 Gr. TP317H	A 358 Gr. 316 (1)	A 479 Gr. 316H

NOTES:
(1) At temperatures over 1000°F, use only when the carbon content is 0.04% or higher.
(2) Not to be used over 650°F.
(3) Not to be used over 850°F.
(4) Not to be used over 1000°F.

A – Standard Class

Temperature, °F	Working Pressures by Class, psig						
	150	300	600	900	1500	2500	4500
−20 to 100	275	720	1,440	2,160	3,600	6,000	10,800
200	235	620	1,240	1,860	3,095	5,160	9,290
300	215	560	1,120	1,680	2,795	4,660	8,390
400	195	515	1,025	1,540	2,570	4,280	7,705
500	170	480	955	1,435	2,390	3,980	7,165
600	140	450	900	1,355	2,255	3,760	6,770
650	125	440	885	1,325	2,210	3,680	6,625
700	110	435	870	1,305	2,170	3,620	6,515
750	95	425	855	1,280	2,135	3,560	6,410
800	80	420	845	1,265	2,110	3,520	6,335
850	65	420	835	1,255	2,090	3,480	6,265
900	50	415	830	1,245	2,075	3,460	6,230
950	35	385	775	1,160	1,930	3,220	5,795
1000	20	365	725	1,090	1,820	3,030	5,450
1050	20	160	720	1,080	1,800	3,000	5,400
1100	20	305	610	915	1,525	2,545	4,575
1150	20	235	475	710	1,185	1,970	3,550
1200	20	185	370	555	925	1,545	2,775
1250	20	145	295	440	735	1,230	2,210
1300	20	115	235	350	585	970	1,750
1350	20	95	190	290	480	800	1,440
1400	20	75	150	225	380	630	1,130
1450	20	60	115	175	290	485	875
1500	15	40	85	125	205	345	620

GENERAL NOTE:
(a) Flanged end valve ratings terminate at 1000°F.

Table VII-2-2.2 Ratings For Group 2.2 Materials (Cont'd)

A 182 Gr. F316 (1)	A 240 Gr. 317 (1)	A 351 Gr. CF3A (2)	A 376 Gr. TP316 (1)
A 182 Gr. F316H	A 240 Gr. 317H	A 351 Gr. CF8M (1)	A 376 Gr. TP316H
A 182 Gr. F317 (1)	A 312 Gr. TP316 (1)	A 351 Gr. CF8A (2)	A 430 Gr. FP316 (1)
A 182 Gr. F317H	A 312 Gr. TP316H	A 351 Gr. CF3M (1)	A 430 Gr. FP316H
A 240 Gr. 316 (1)	A 312 Gr. TP317 (1)	A 351 Gr. CG8MF (4)	A 479 Gr. 316 (1)
A 240 Gr. 316H	A 312 Gr. TP317H	A 358 Gr. 316 (1)	A 479 Gr. 316H

NOTES:
(1) At temperatures over 1000°F, use only when the carbon content is 0.04% or higher.
(2) Not to be used over 650°F.
(3) Not to be used over 850°F.
(4) Not to be used over 1000°F.

B – Special Class

Temperature, °F	Working Pressures by Class, psig						
	150	300	600	900	1500	2500	4500
−20 to 100	290	750	1,500	2,250	3,750	6,250	11,250
200	265	690	1,380	2,075	3,455	5,760	10,365
300	240	625	1,250	1,870	3,120	5,200	9,360
400	220	575	1,145	1,720	2,865	4,775	8,600
500	205	535	1,065	1,600	2,665	4,440	7,995
600	195	505	1,005	1,510	2,520	4,195	7,555
650	190	495	985	1,480	2,465	4,105	7,395
700	185	485	970	1,455	2,425	4,040	7,270
750	185	475	955	1,430	2,385	3,975	7,150
800	180	470	945	1,415	2,355	3,930	7,070
850	180	465	930	1,400	2,330	3,885	6,990
900	180	465	925	1,390	2,315	3,860	6,950
950	175	460	915	1,375	2,290	3,815	6,870
1000	160	420	840	1,260	2,105	3,505	6,310
1050	160	420	840	1,260	2,105	3,505	6,310
1100	145	380	765	1,145	1,905	3,180	5,720
1150	115	295	590	885	1,480	2,465	4,435
1200	90	230	465	695	1,155	1,930	3,470
1250	70	185	370	555	920	1,535	2,765
1300	55	145	290	435	730	1,215	2,185
1350	45	120	240	360	600	1,000	1,800
1400	35	95	190	285	470	785	1,415
1450	30	75	145	220	365	605	1,095
1500	20	50	105	155	260	430	770

Table VII-2-2.3 Ratings For Group 2.3 Materials

A 182 Gr. F304L (1)	A 240 Gr. 304L (1)	A 312 Gr. TP304L (1)	A 479 Gr. 304L (1)
A 182 Gr. F316L	A 240 Gr. 316L	A 312 Gr. TP316L	A 479 Gr. 316L

NOTE:
(1) Not to be used over 800°F.

A – Standard Class

Temperature, °F	Working Pressures by Class, psig						
	150	300	600	900	1500	2500	4500
−20 to 100	230	600	1,200	1,800	3,000	5,000	9,000
200	195	510	1,020	1,535	2,555	4,260	7,670
300	175	455	910	1,370	2,280	3,800	6,840
400	160	420	840	1,260	2,100	3,500	6,300
500	150	395	785	1,180	1,970	3,280	5,905
600	140	370	745	1,115	1,860	3,100	5,580
650	125	365	730	1,095	1,825	3,040	5,470
700	110	360	720	1,080	1,800	3,000	5,400
750	110	355	705	1,060	1,765	2,940	5,290
800	80	345	690	1,035	1,730	2,880	5,185
850	65	340	675	1,015	1,690	2,820	5,075

B – Special Class

Temperature, °F	Working Pressures by Class, psig						
	150	300	600	900	1500	2500	4500
−20 to 100	255	670	1,340	2,010	3,350	5,580	10,045
200	220	570	1,140	1,710	2,855	4,755	8,560
300	195	510	1,020	1,525	2,545	4,240	7,635
400	180	470	940	1,405	2,345	3,905	7,030
500	170	440	880	1,320	2,195	3,660	6,590
600	160	415	830	1,245	2,075	3,460	6,230
650	155	405	815	1,220	2,035	3,395	6,105
700	155	400	805	1,205	2,010	3,350	6,025
750	150	395	790	1,180	1,970	3,280	5,905
800	150	385	770	1,155	1,930	3,215	5,785
850	145	380	755	1,135	1,890	3,145	5,665

Table VII-2-2.4 Ratings for Group 2.4 Materials

A 182 Gr. F321 (1)	A 312 Gr. TP321 (1)	A 376 Gr. TP321 (1)	A 430 Gr. FP321H
A 182 Gr. F321H (2)	A 312 Gr. TP321H	A 376 Gr. TP321H	A 479 Gr. 321 (1)
A 240 Gr. 321 (1)	A 358 Gr. 321 (1)	A 430 Gr. FP321 (1)	A 479 Gr. 321H
A 240 Gr. 321H (2)			

NOTES:
(1) Not to be used over 1000°F.
(2) At temperatures over 1000°F, use only if the material is heat treated by heating to a minimum temperature of 2000°F.

A – Standard Class

Temperature, °F	Working Pressures by Class, psig						
	150	300	600	900	1500	2500	4500
100	275	720	1,440	2,160	3,600	6,000	10,800
200	250	650	1,295	1,945	3,240	5,400	9,720
300	230	595	1,190	1,785	2,975	4,960	8,930
400	200	550	1,105	1,655	2,760	4,600	8,280
500	170	515	1,030	1,550	2,580	4,300	7,740
600	140	485	975	1,460	2,435	4,060	7,310
650	125	475	950	1,425	2,375	3,960	7,130
700	110	465	930	1,395	2,330	3,880	6,985
750	95	460	915	1,375	2,290	3,820	6,875
800	80	450	900	1,355	2,255	3,760	6,770
850	65	445	895	1,340	2,230	3,720	6,695
900	50	440	885	1,325	2,210	3,680	6,625
950	35	385	775	1,160	1,930	3,220	5,795
1000	20	365	725	1,090	1,820	3,030	5,450
1050	20	360	720	1,080	1,800	3,000	5,400
1100	20	310	625	935	1,560	2,600	4,680
1150	20	235	475	710	1,185	1,970	3,550
1200	20	185	370	555	925	1,545	2,775
1250	20	140	280	420	705	1,170	2,110
1300	20	110	220	330	550	915	1,645
1350	20	185	170	255	430	715	1,285
1400	20	65	130	195	325	545	975
1450	20	50	105	155	255	430	770
1500	15	40	75	115	190	315	565

GENERAL NOTE:
(a) Flanged end valve ratings terminate at 1000°F.

Table VII-2-2.4 Ratings for Group 2.4 Materials (Cont'd)

A 182 Gr. F321 (1)	A 312 Gr. TP321 (1)	A 376 Gr. TP321 (1)	A 430 Gr. FP321H
A 182 Gr. F321H (2)	A 312 Gr. TP321H	A 376 Gr. TP321H	A 479 Gr. 321 (1)
A 240 Gr. 321 (1)	A 358 Gr. 321 (1)	A 430 Gr. FP321 (1)	A 479 Gr. 321H
A 240 Gr. 321H (2)			

NOTES:
(1) Not to be used over 1000°F.
(2) At temperatures over 1000°F, use only if the material is heat treated by heating to a minimum temperature of 2000°F.

B – Special Class

Temperature, °F	Working Pressures by Class, psig						
	150	300	600	900	1500	2500	4500
−20 to 100	290	750	1,500	2,250	3,750	6,250	11,250
200	275	710	1,425	2,135	3,555	5,930	10,670
300	255	665	1,330	1,995	3,320	5,535	9,965
400	235	615	1,230	1,850	2,080	5,135	9,240
500	220	575	1,150	1,730	2,880	4,800	8,640
600	210	545	1,090	1,630	2,720	4,530	8,155
650	205	530	1,060	1,590	2,650	4,420	7,955
700	200	520	1,040	1,560	2,600	4,330	7,795
750	195	510	1,025	1,535	2,560	4,265	7,675
800	195	505	1,005	1,510	2,520	4,195	7,555
850	190	500	995	1,495	2,490	4,150	7,475
900	190	495	985	1,480	2,465	4,105	7,395
950	180	470	945	1,415	2,360	3,930	7,070
1000	160	420	840	1,260	2,105	3,505	6,310
1050	160	420	840	1,260	2,105	3,505	6,310
1100	150	390	780	1,170	1,950	3,250	5,850
1150	115	295	590	885	1,480	2,465	4,435
1200	90	230	465	695	1,155	1,930	3,470
1250	65	175	350	525	880	1,465	2,635
1300	55	135	275	410	685	1,145	2,055
1350	40	105	215	320	535	895	1,605
1400	30	80	165	245	405	680	1,220
1450	25	65	130	195	320	535	965
1500	20	45	95	140	235	395	705

Table VII-2-2.5 Ratings for Group 2.5 Materials

A 182 Gr. F347 (1)	A 240 Gr. 348 (1)		A 430 Gr. FP347 (1)
A 182 Gr. F347H (2)	A 240 Gr. 348H (2)	A 358 Gr. 347 (1)	A 430 Gr. FP347H
A 182 Gr. F348 (1)	A 312 Gr. TP347 (1)	A 376 Gr. TP347 (1)	A 479 Gr. 347 (1)
A 182 Gr. F348H (2)	A 312 Gr. TP347H	A 376 Gr. TP347H	A 479 Gr. 347H
A 240 Gr. 347 (1)	A 312 Gr. TP348 (1)	A 376 Gr. TP348 (1)	A 479 Gr. 348 (1)
A 240 Gr. 347H (2)	A 312 Gr. TP348H	A 376 Gr. TP348H (1)	A 479 Gr. 348H

NOTES:
(1) Not to be used over 1000°F.
(2) For temperatures over 1000°F, use only if the material is heat treated by heating to a minimum temperature of 2000°F.

A – Standard Class

Temperature, °F	Working Pressures by Class, psig						
	150	300	600	900	1500	2500	4500
−20 to 100	275	720	1,440	2,160	3,600	6,000	10,800
200	255	660	1,325	1,985	3,310	5,520	9,935
300	230	615	1,235	1,850	3,085	5,140	9,250
400	200	575	1,150	1,730	2,880	4,800	8,640
500	170	540	1,085	1,625	2,710	4,520	8,135
600	140	515	1,030	1,550	2,580	4,300	7,740
650	125	505	1,015	1,520	2,530	4,220	7,595
700	110	495	995	1,490	2,485	4,140	7,450
750	95	490	985	1,475	2,460	4,100	7,380
800	80	485	975	1,460	2,435	4,060	7,310
850	65	485	970	1,455	2,425	4,040	7,270
900	50	450	900	1,350	2,245	3,745	6,740
950	35	385	775	1,160	1,930	3,220	5,795
1000	20	365	725	1,090	1,820	3,030	5,450
1050	20	360	720	1,080	1,800	3,000	5,400
1100	20	325	645	965	1,610	2,685	4,835
1150	20	275	550	825	1,370	2,285	4,115
1200	20	205	410	620	1,030	1,715	3,085
1250	20	180	365	545	910	1,515	2,725
1300	20	140	275	410	685	1,145	2,060
1350	20	105	205	310	515	860	1,545
1400	20	75	150	225	380	630	1,130
1450	20	60	115	175	290	485	875
1500	15	40	85	125	205	345	620

GENERAL NOTE:
(a) Flanged end valve ratings terminate at 1000°F.

Table VII-2-2.5 Ratings for Group 2.5 Materials (Cont'd)

A 182 Gr. F347 (1)	A 240 Gr. 348 (1)		A 430 Gr. FP347 (1)
A 182 Gr. F347H (2)	A 240 Gr. 348H (2)	A 358 Gr. 347 (1)	A 430 Gr. FP347H
A 182 Gr. F348 (1)	A 312 Gr. TP347 (1)	A 376 Gr. TP347 (1)	A 479 Gr. 347 (1)
A 182 Gr. F348H (2)	A 312 Gr. TP347H	A 376 Gr. TP347H	A 479 Gr. 347H
A 240 Gr. 347 (1)	A 312 Gr. TP348 (1)	A 376 Gr. TP348 (1)	A 479 Gr. 348 (1)
A 240 Gr. 347H (2)	A 312 Gr. TP348H	A 376 Gr. TP348H (1)	A 479 Gr. 348H

NOTES:
(1) Not to be used over 1000°F.
(2) For temperatures over 1000°F, use only if the material is heat treated by heating to a minimum temperature of 2000°F.

B – Special Class

Temperature, °F	Working Pressures by Class, psig						
	150	300	600	900	1500	2500	4500
−20 to 100	290	750	1,500	2,250	3,750	6,250	11,250
200	285	740	1,480	2,220	3,695	6,160	11,090
300	265	690	1,375	2,065	3,440	5,735	10,325
400	245	645	1,285	1,930	3,215	5,355	9,645
500	230	605	1,210	1,815	3,025	5,045	9,080
600	220	575	1,150	1,730	2,880	4,800	8,640
650	215	565	1,130	1,695	2,825	4,710	8,480
700	215	555	1,110	1,665	2,770	4,620	8,315
750	210	550	1,100	1,645	2,745	4,575	8,235
800	210	545	1,090	1,630	2,720	4,530	8,155
850	205	540	1,080	1,625	2,705	4,510	8,115
900	205	540	1,080	1,625	2,705	4,510	8,115
950	180	470	945	1,415	2,360	3,930	7,070
1000	160	420	840	1,260	2,105	3,505	6,310
1050	160	420	840	1,260	2,105	3,505	6,310
1100	155	405	805	1,210	2,015	3,360	6,045
1150	130	345	685	1,030	1,715	2,860	5,145
1200	100	260	515	770	1,285	2,145	3,860
1250	90	230	455	680	1,135	1,895	3,410
1300	65	170	345	515	860	1,430	2,570
1350	50	130	260	385	645	1,070	1,930
1400	35	95	190	285	470	785	1,415
1450	30	75	145	220	365	610	1,095
1500	20	50	105	155	260	430	770

Table VII-2-2.6 Ratings for Group 2.6 Materials

A 312 Gr. TP309H A 240 Gr. 309H A 358 Gr. 309H

A – Standard Class

Temperature, °F	Working Pressures by Class, psig						
	150	300	600	900	1500	2500	4500
−20 to 100	275	720	1,440	2,160	3,600	6,000	10,080
200	240	630	1,260	1,895	3,155	5,260	9,470
300	225	580	1,160	1,740	2,905	4,840	8,710
400	200	545	1,090	1,635	2,725	4,540	8,170
500	170	520	1,035	1,555	2,590	4,320	7,775
600	140	500	1,000	1,500	2,495	4,160	7,490
650	125	490	985	1,475	2,460	4,100	7,380
700	110	485	970	1,455	2,425	4,040	7,270
750	95	480	960	1,440	2,400	4,000	7,200
800	80	475	945	1,420	2,365	3,940	7,090
850	65	465	930	1,395	2,330	3,880	6,985
900	50	450	900	1,350	2,245	3,745	6,740
950	35	385	775	1,160	1,930	3,220	5,795
1000	20	365	725	1,090	1,820	3,030	5,450
1050	20	355	705	1,060	1,765	2,945	5,295
1100	20	260	520	780	1,305	2,170	3,910
1150	20	190	375	565	945	1,570	2,830
1200	20	135	275	410	685	1,114	2,055
1250	20	105	205	310	515	855	1,545
1300	20	75	150	225	375	630	1,130
1350	20	60	115	175	290	485	875
1400	15	45	90	135	225	370	670
1450	15	35	70	105	170	285	515
1500	10	25	50	75	130	215	385

GENERAL NOTE:
(a) Flanged end valve ratings terminate at 1000°F.

Table VII-2-2.6 Ratings for Group 2.6 Materials (Cont'd)

A 312 Gr. TP309H A 240 Gr. 309H A 358 Gr. 309H

B – Special Class

Temperature, °F	Working Pressures by Class, psig						
	150	300	600	900	1500	2500	4500
−20 to 100	290	750	1,500	2,250	3,750	6,250	11,250
200	270	705	1,410	2,115	3,520	5,870	10,565
300	250	650	1,295	1,945	3,240	5,400	9,725
400	235	610	1,215	1,825	3,040	5,065	9,120
500	220	580	1,155	1,735	2,895	4,820	8,680
600	215	555	1,115	1,670	2,785	4,645	8,355
650	210	550	1,100	1,645	2,745	4,575	8,235
700	205	540	1,080	1,625	2,705	4,510	8,115
750	205	535	1,070	1,605	2,680	4,465	8,035
800	200	530	1,055	1,585	2,640	4,395	7,915
850	200	520	1,040	1,560	2,600	4,330	7,795
900	195	510	1,025	1,535	2,560	4,265	7,675
950	180	470	945	1,415	2,360	3,930	7,070
1000	160	420	840	1,260	2,105	3,505	6,310
1050	160	420	840	1,260	1,105	3,505	6,310
1100	125	325	650	975	1,630	2,715	4,885
1150	90	235	470	705	1,180	1,965	3,535
1200	65	170	345	515	855	1,430	2,570
1250	50	130	255	385	645	1,070	1,930
1300	35	95	190	285	470	785	1,415
1350	30	75	145	220	365	605	1,095
1400	20	55	110	165	280	465	835
1450	15	45	85	130	215	355	645
1500	10	30	65	95	160	270	480

Table VII-2-2.7 Ratings for Group 2.7 Materials

A 182 Gr. F310H	A 312 Gr. TP310H	A 358 Gr. 310H
A 240 Gr. 310H	A 479 Gr. 310H	

A – Standard Class

Temperature, °F	Working Pressures by Class, psig						
	150	300	600	900	1500	2500	4500
−20 to 100	275	720	1,440	2,160	3,600	6,000	10,080
200	245	635	1,270	1,910	3,180	5,300	9,540
300	225	580	1,160	1,740	2,905	4,840	8,710
400	200	540	1,085	1,625	2,710	4,520	8,135
500	170	515	1,025	1,540	2,570	4,280	7,705
600	140	495	990	1,485	2,470	4,120	7,415
650	125	485	970	1,455	2,425	4,040	7,270
700	110	480	955	1,435	2,390	3,980	7,165
750	95	470	940	1,410	2,350	3,920	7,055
800	80	465	930	1,395	2,330	3,880	6,985
850	65	460	915	1,375	2,290	3,820	6,875
900	50	450	900	1,350	2,245	3,745	6,740
950	35	385	775	1,160	1,930	3,220	5,795
1000	20	365	725	1,090	1,820	3,030	5,450
1050	20	355	705	1,060	1,765	2,945	5,295
1100	20	260	520	780	1,305	2,170	3,910
1150	20	190	375	565	945	1,570	2,830
1200	20	135	275	410	685	1,145	2,055
1250	20	105	205	310	515	855	1,545
1300	20	75	150	225	375	630	1,130
1350	20	60	115	175	290	485	875
1400	15	45	90	135	225	370	670
1450	15	35	65	100	165	275	500
1500	10	25	50	75	130	215	385

GENERAL NOTE:
(a) Flanged end valve ratings terminate at 1000°F.

Table VII-2-2.7 Ratings for Group 2.7 Materials (Cont'd)

A 182 Gr. F310H	A 312 Gr. TP310H	A 358 Gr. 310H
A 240 Gr. 310H	A 479 Gr. 310H	

B – Special Class

Temperature, °F	Working Pressures by Class, psig						
	150	300	600	900	1500	2500	4500
−20 to 100	290	750	1,500	2,250	3,750	6,250	11,250
200	270	710	1,420	2,130	3,550	5,915	10,645
300	250	650	1,295	1,945	3,240	5,400	9,725
400	230	605	1,210	1,815	3,025	5,045	9,080
500	220	575	1,145	1,720	2,865	4,775	8,600
600	210	550	1,105	1,655	2,760	4,600	8,275
650	205	540	1,080	1,625	2,705	4,510	8,115
700	205	535	1,065	1,600	2,665	4,440	7,995
750	200	525	1,050	1,575	2,625	4,375	7,875
800	200	520	1,040	1,560	2,600	4,330	7,795
850	195	510	1,025	1,535	2,560	4,265	7,675
900	195	505	1,005	1,510	2,520	4,195	7,555
950	180	470	945	1,415	2,360	3,930	7,070
1000	160	420	840	1,260	2,105	3,505	6,310
1050	160	420	840	1,260	2,105	3,505	6,310
1100	125	325	650	975	1,630	2,715	4,885
1150	90	235	470	705	1,180	1,965	3,535
1200	65	170	345	515	855	1,430	2,570
1250	50	130	255	385	645	1,070	1,930
1300	35	95	190	285	470	785	1,415
1350	30	75	145	220	365	605	1,095
1400	20	55	110	165	280	465	835
1450	15	40	85	125	210	345	625
1500	10	30	65	95	160	270	480

Table VII-2-2.8 Ratings for Group 2.8 Materials

A 182 Gr. F44	A 240 Gr. S31803 (1)	A 479 Gr. S31254	A 790 Gr. S31803 (1)
A 182 Gr. F51 (1)	A 240 Gr. S32760 (1)	A 479 Gr. S32750 (1)	A 790 Gr. S32760 (1)
A 182 Gr. F55	A 240 Gr. S31254	A 789 Gr. S32750 (1)	A 351 Gr. CE8M (1)
A 182 Gr. F53 (1)	A 240 Gr. S32750 (1)	A 789 Gr. S32760 (1)	A 351 Gr. CD4MCuN (1)
A 312 Gr. S31254	A 351 Gr. CK3MCuN	A 789 Gr. S31803 (1)	A 351 Gr. CD3MWCuN (1)
A 358 Gr. S31254	A 479 Gr. S31803 (1)	A 790 Gr. S32750 (1)	

NOTE:
(1) This steel may become brittle after service at moderately elevated temperatures. Not to be used over 600°F.

A – Standard Class

Temperature, °F	Working Pressures by Class, psig						
	150	300	600	900	1500	2500	4500
−20 to 100	290	750	1,500	2,250	3,750	6,250	11,250
200	260	745	1,490	2,230	3,720	6,200	11,160
300	230	665	1,335	2,000	3,335	5,560	10,010
400	200	615	1,230	1,845	3,070	5,120	9,215
500	170	580	1,160	1,740	2,905	4,840	8,710
600	140	555	1,115	1,670	2,785	4,640	8,350
650	125	545	1,095	1,640	2,735	4,560	8,210
700	110	540	1,085	1,625	2,710	4,520	8,135
750	95	530	1,065	1,595	2,660	4,430	7,970

B – Special Class

Temperature, °F	Working Pressures by Class, psig						
	150	300	600	900	1500	2500	4500
−20 to 100	290	750	1,500	2,250	3,750	6,250	11,250
200	290	750	1,500	2,250	3,750	6,250	11,250
300	285	745	1,490	2,235	3,725	6,205	11,170
400	265	685	1,370	2,055	3,430	5,715	10,285
500	250	650	1,295	1,945	3,240	5,400	9,725
600	240	620	1,245	1,865	3,105	5,180	9,320
650	235	610	1,220	1,830	3,055	5,090	9,160
700	230	605	1,210	1,815	3,025	5,045	9,080
750	230	600	1,200	1,800	3,000	5,000	9,000

Table VII-2-2.9 Ratings For Group 2.9 Materials

A 240 Gr. 309S (1)(2)(3)	A 240 Gr. 310S (1)(2)(3)	A 479 Gr. 310S (1)(2)(3)

NOTES:
(1) At temperatures above 1000°F, use only when the carbon content is 0.04% or higher.
(2) For temperatures above 1000°F, use only if the material is solution heat treated to the minimum temperature specified in the material specification but not lower than 1900°F and quenching in water or rapidly cooling by other means.
(3) This material should be used for service temperatures 960°F and above only when assurance is provided that grain size is not finer than ASTM 6.

A – Standard Class

Temperature, °F	Working Pressures by Class, psig						
	150	300	600	900	1500	2500	4500
−20 to 100	275	720	1,440	2,160	3,600	6,000	10,800
200	240	630	1,260	1,895	3,155	5,260	9,470
300	225	580	1,160	1,740	2,905	4,840	8,710
400	200	540	1,085	1,625	2,710	4,520	8,135
500	170	515	1,025	1,540	2,570	4,280	7,705
600	140	495	990	1,485	2,470	4,120	7,415
650	125	485	970	1,455	2,425	4,040	7,270
700	110	480	955	1,435	2,390	3,980	7,165
750	95	470	940	1,410	2,350	3,920	7,055
800	80	465	930	1,395	2,330	3,880	6,985
850	65	460	915	1,375	2,290	3,820	6,875
900	50	450	900	1,350	2,245	3,745	6,740
950	35	385	775	1,160	1,930	3,220	5,795
1000	20	340	680	1,020	1,695	2,830	5,090
1050	20	245	485	730	1,215	2,030	3,650
1100	20	170	345	515	855	1,430	2,570
1150	20	125	245	370	615	1,030	1,850
1200	20	85	170	255	430	715	1,285
1250	20	50	105	155	255	430	770
1300	10	25	55	80	135	230	410
1350	5	15	35	50	85	145	255
1400	5	15	25	40	70	115	205
1450	5	10	20	30	50	85	155
1500	5	5	15	20	35	55	105

GENERAL NOTE:
(a) Flanged end valve ratings terminate at 1000°F.

Table VII-2-2.9 Ratings For Group 2.9 Materials (Cont'd)

A 240 Gr. 309S (1)(2)(3)	A 240 Gr. 310S (1)(2)(3)	A 479 Gr. 310S (1)(2)(3)

NOTES
(1) At temperatures above 1000°F, use only when the carbon content is 0.04% or higher.
(2) For temperatures above 1000°F, use only if the material is solution heat treated to the minimum temperature specified in the material specification but not lower than 1900°F and quenching in water or rapidly cooling by other means.
(3) This material should be used for service temperatures 960°F and above only when assurance is provided that grain size is not finer than ASTM 6.

B – Special Class

Temperature, °F	Working Pressures by Class, psig						
	150	300	600	900	1500	2500	4500
−20 to 100	290	750	1,500	2,250	3,750	6,250	11,250
200	270	705	1,410	2,115	3,520	5,870	10,565
300	250	650	1,295	1,945	3,240	5,400	9,725
400	230	605	1,210	1,815	3,025	5,045	9,080
500	220	575	1,145	1,720	2,865	4,775	8,600
600	210	550	1,105	1,655	2,760	4,600	8,275
650	205	540	1,080	1,625	2,705	4,510	8,115
700	205	535	1,065	1,600	2,665	4,440	7,995
750	200	525	1,050	1,575	2,625	4,375	7,875
800	200	520	1,040	1,560	2,600	4,330	7,795
850	195	510	1,025	1,535	2,560	4,265	7,675
900	195	505	1,005	1,510	2,520	4,195	7,555
950	180	470	945	1,415	2,360	3,930	7,070
1000	160	420	840	1,260	2,105	3,505	6,310
1050	115	305	610	915	1,520	2,535	4,565
1100	80	215	430	645	1,070	1,785	3,215
1150	60	155	310	465	770	1,285	2,315
1200	40	105	215	320	535	895	1,605
1250	25	65	130	195	320	535	965
1300	15	35	70	105	170	285	515
1350	10	20	45	65	105	180	320
1400	5	15	35	50	85	145	255
1450	5	15	25	40	65	105	195
1500	5	10	15	25	45	70	130

Table VII-2-2.10 Ratings For Group 2.10 Materials

A 351 Gr. CH8 (1)	A 351 Gr. CH20 (1)

NOTE:
(1) At temperatures above 1000°F, use only when the carbon content is 0.04% or higher.

A – Standard Class

Temperature, °F	Working Pressures by Class, psig						
	150	300	600	900	1500	2500	4500
−20 to 100	260	670	1,345	2,015	3,360	5,600	10,080
200	210	550	1,100	1,650	2,750	4,580	8,245
300	195	505	1,015	1,520	2,530	4,220	7,595
400	185	485	970	1,455	2,425	4,040	7,270
500	170	470	940	1,410	2,350	3,920	7,055
600	140	455	910	1,370	2,280	3,800	6,840
650	125	445	895	1,340	2,230	3,720	6,695
700	110	435	870	1,305	2,170	3,620	6,515
750	95	420	845	1,265	2,110	3,520	6,335
800	80	410	820	1,230	2,050	3,420	6,155
850	65	400	795	1,195	1,990	3,320	5,975
900	50	385	770	1,150	1,920	3,200	5,760
950	35	370	740	1,110	1,850	3,080	5,545
1000	20	340	675	1,015	1,690	2,820	5,075
1050	20	290	585	875	1,455	2,430	4,370
1100	20	225	445	670	1,115	1,855	3,345
1150	20	170	345	515	855	1,430	2,570
1200	20	130	260	390	650	1,085	1,955
1250	20	100	200	300	495	830	1,490
1300	20	80	160	235	395	655	1,185
1350	20	60	125	185	310	515	925
1400	15	45	90	135	225	370	670
1450	10	30	60	95	155	255	465
1500	10	25	55	80	135	230	410

GENERAL NOTE:
(a) Flanged end valve ratings terminate at 1000°F.

Table VII-2-2.10 Ratings For Group 2.10 Materials (Cont'd)

A 351 Gr. CH8 (1)	A 351 Gr. CH20 (1)

NOTE:
(1) At temperatures above 1000°F, use only when the carbon content is 0.04% or higher.

B – Special Class

Temperature, °F	Working Pressures by Class, psig						
	150	300	600	900	1500	2500	4500
−20 to 100	265	695	1,395	2,090	3,480	5,805	10,445
200	235	615	1,225	1,840	3,065	5,110	9,200
300	215	565	1,130	1,695	2,825	4,710	8,480
400	205	540	1,080	1,625	2,705	4,510	8,115
500	200	525	1,050	1,575	2,625	4,375	7,875
600	195	510	1,020	1,525	2,545	4,240	7,635
650	190	500	995	1,495	2,490	4,150	7,475
700	185	485	970	1,455	2,425	4,040	7,270
750	180	470	945	1,415	2,355	3,930	7,070
800	175	460	915	1,375	2,290	3,815	6,870
850	170	445	890	1,335	2,225	3,705	6,670
900	165	430	855	1,285	2,145	3,570	6,430
950	160	415	825	1,240	2,065	3,440	6,190
1000	150	395	795	1,190	1,980	3,305	5,945
1050	140	365	730	1,095	1,820	3,035	5,465
1100	105	280	555	835	1,395	2,320	4,180
1150	80	215	430	645	1,070	1,785	3,215
1200	60	165	325	490	815	1,355	2,445
1250	50	125	250	375	620	1,035	1,865
1300	40	100	195	295	495	820	1,480
1350	30	75	155	230	385	645	1,155
1400	20	55	110	165	280	465	835
1450	15	40	75	115	195	320	580
1500	15	35	70	105	170	285	515

Table VII-2-2.11 Ratings For Group 2.11 Materials

A 351 Gr. CF8C (1)

NOTE:
(1) At temperatures above 1000°F, use only when the carbon content is 0.04% or higher.

A – Standard Class

Temperature, °F	Working Pressures by Class, psig						
	150	300	600	900	1500	2500	4500
−20 to 100	275	720	1,440	2,160	3,600	6,000	10,800
200	255	660	1,325	1,985	3,310	5,520	9,935
300	230	615	1,235	1,850	3,085	5,140	9,250
400	200	575	1,150	1,730	2,880	4,800	8,640
500	170	540	1,085	1,625	2,710	4,520	8,135
600	140	515	1,030	1,550	2,580	4,300	7,740
650	125	505	1,015	1,520	2,530	4,220	7,595
700	110	495	995	1,490	2,485	4,140	7,450
750	95	490	985	1,475	2,460	4,100	7,380
800	80	485	975	1,460	2,435	4,060	7,310
850	65	485	970	1,455	2,425	4,040	7,270
900	50	450	900	1,350	2,245	3,745	6,740
950	35	385	775	1,160	1,930	3,220	5,795
1000	20	365	725	1,090	1,820	3,030	5,450
1050	20	360	720	1,080	1,800	3,000	5,400
1100	20	310	625	935	1,560	2,600	4,680
1150	20	210	420	625	1,045	1,745	3,135
1200	20	150	300	455	755	1,255	2,265
1250	20	115	225	340	565	945	1,695
1300	20	75	150	225	375	630	1,130
1350	20	50	105	155	255	430	770
1400	15	40	80	125	205	345	615
1450	10	30	60	95	155	255	465
1500	10	25	55	80	135	230	410

GENERAL NOTE:
(a) Flanged end valve ratings terminate at 1000°F.

Table VII-2-2.11 Ratings For Group 2.11 Materials (Cont'd)

A 351 Gr. CF8C (1)

NOTE:
(1) At temperatures above 1000°F, use only when the carbon content is 0.04% or higher.

B – Special Class

Temperature, °F	Working Pressures by Class, psig						
	150	300	600	900	1500	2500	4500
−20 to 100	290	750	1,500	2,250	3,750	6,250	1,1250
200	275	715	1,435	2,150	3,585	5,975	10,750
300	255	660	1,320	1,975	3,295	5,490	9,885
400	240	620	1,245	1,865	3,105	5,180	9,320
500	230	600	1,200	1,800	3,000	5,000	9,000
600	220	575	1,150	1,730	2,880	4,800	8,640
650	215	565	1,130	1,695	2,825	4,710	8,480
700	215	555	1,110	1,665	2,770	4,620	8,315
750	210	550	1,100	1,645	2,745	4,575	8,235
800	210	545	1,090	1,630	2,720	4,530	8,155
850	205	540	1,080	1,625	2,705	4,510	8,115
900	205	540	1,080	1,625	2,705	4,510	8,115
950	180	470	945	1,415	2,360	3,930	7,070
1000	160	420	840	1,260	2,105	3,505	6,310
1050	160	420	840	1,260	2,105	3,505	6,310
1100	150	390	780	1,170	1,950	3,250	5,850
1150	100	260	525	785	1,305	2,180	3,920
1200	70	190	375	565	945	1,570	2,830
1250	55	140	285	425	705	1,180	2,120
1300	35	95	190	285	470	785	1,415
1350	25	65	130	195	320	535	965
1400	20	50	105	155	255	430	770
1450	15	40	75	115	195	320	580
1500	15	35	70	105	170	285	515

Table VII-2-2.12 Ratings For Group 2.12 Materials

A 351 Gr. CK20 (1)

NOTE:
(1) At temperatures above 1000°F, use only when the carbon content is 0.04% or higher.

A – Standard Class

Temperature, °F	Working Pressures by Class, psig						
	150	300	600	900	1500	2500	4500
−20 to 100	260	670	1,345	2,015	3,360	5,600	10,080
200	210	550	1,100	1,650	2,750	4,580	8,245
300	195	505	1,015	1,520	2,530	4,220	7,595
400	185	485	970	1,455	2,425	4,040	7,270
500	170	470	940	1,410	2,350	3,920	7,055
600	140	455	910	1,370	2,280	3,800	6,840
650	125	445	895	1,340	2,230	3,720	6,695
700	110	435	870	1,305	2,170	3,620	6,515
750	95	420	845	1,265	2,110	3,520	6,335
800	80	410	820	1,230	2,050	3,420	6,155
850	65	400	795	1,195	1,990	3,320	5,975
900	50	385	770	1,150	1,920	3,200	5,760
950	35	370	740	1,110	1,850	3,080	5,545
1000	20	340	675	1,015	1,690	2,820	5,075
1050	20	325	650	975	1,630	2,715	4,885
1100	20	290	585	875	1,455	2,430	4,370
1150	20	250	500	750	1,250	2,085	3,755
1200	20	205	410	615	1,030	1,715	3,085
1250	20	165	330	495	825	1,370	2,470
1300	20	120	240	360	600	1,000	1,800
1350	20	80	165	245	410	685	1,235
1400	20	55	110	165	275	455	825
1450	15	40	75	115	190	315	565
1500	10	25	55	80	135	230	410

GENERAL NOTE:
(a) Flanged end valve ratings terminate at 1000°F.

Table VII-2-2.12 Ratings For Group 2.12 Materials (Cont'd)

A 351 Gr. CK20 (1)

NOTE:
(1) At temperatures above 1000°F, use only when the carbon content is 0.04% or higher.

B – Special Class

Temperature, °F	Working Pressures by Class, psig						
	150	300	600	900	1500	2500	4500
−20 to 100	265	695	1,395	2,090	3,480	5,805	10,445
200	235	615	1,225	1,840	3,065	5,110	9,200
300	215	565	1,130	1,695	2,825	4,710	8,480
400	205	540	1,080	1,625	2,705	4,510	8,115
500	200	525	1,050	1,575	2,625	4,375	7,875
600	195	510	1,020	1,525	2,545	4,240	7,635
650	190	500	995	1,495	2,490	4,150	7,475
700	185	485	970	1,455	2,425	4,040	7,270
750	180	470	945	1,415	2,355	3,930	7,070
800	175	460	915	1,375	2,290	3,815	6,870
850	170	445	890	1,335	2,225	3,705	6,670
900	165	430	855	1,285	2,145	3,570	6,430
950	160	415	825	1,240	2,065	3,440	6,190
1000	150	395	795	1,190	1,980	3,305	5,945
1050	155	405	815	1,220	2,035	3,395	6,105
1100	140	365	730	1,095	1,820	3,035	5,465
1150	120	315	625	940	1,565	2,605	4,695
1200	100	255	515	770	1,285	2,145	3,855
1250	80	205	410	615	1,030	1,715	3,085
1300	60	150	300	450	750	1,250	2,250
1350	40	105	205	310	515	855	1,545
1400	25	70	135	205	345	570	1,030
1450	20	45	95	140	235	395	705
1500	15	35	70	105	170	285	515

Table VII-2-3.1 Ratings for Group 3.1 Materials

B 462 Gr. N08020 (1)	B 463 Gr. N08020 (1) B 464 Gr. N08020 (1)	B 468 Gr. N08020 (1)	B 473 Gr. N08020 (1)

NOTE:
(1) Use annealed material only.

A – Standard Class

Temperature, °F	Working Pressures by Class, psig						
	150	300	600	900	1500	2500	4500
−20 to 100	290	750	1,500	2,250	3,750	6,250	11,250
200	260	740	1,485	2,225	3,710	6,180	11,125
300	230	710	1,420	2,130	3,550	5,920	10,655
400	200	680	1,365	2,045	3,410	5,680	10,225
500	170	655	1,310	1,965	3,275	5,460	9,830
600	140	605	1,210	1,815	3,025	5,040	9,070
650	125	590	1,175	1,765	2,940	4,905	8,825
700	110	570	1,135	1,705	2,840	4,730	8,515
750	95	530	1,065	1,595	2,660	4,430	7,970
800	80	510	1,015	1,525	2,540	4,230	7,610

B – Special Class

Temperature, °F	Working Pressures by Class, psig						
	150	300	600	900	1500	2500	4500
−20 to 100	290	750	1,500	2,250	3,750	6,250	11,250
200	290	750	1,500	2,250	3,750	6,250	11,250
300	290	750	1,500	2,250	3,750	6,250	11,250
400	290	750	1,500	2,250	3,750	6,250	11,250
500	280	730	1,465	2,195	3,655	6,095	10,970
600	270	710	1,420	2,130	3,550	5,915	10,645
650	270	700	1,405	2,105	3,510	5,850	10,525
700	265	695	1,395	2,090	3,480	5,805	10,445
750	265	690	1,380	2,075	3,455	5,760	10,365
800	260	675	1,350	2,025	3,375	5,625	10,125

Table VII-2-3.2 Ratings for Group 3.2 Materials

B 160 Gr. N02200 (1)(2)	B 161 Gr. N02200 (1)	B 162 Gr. N02200 (1)	B 163 Gr. N02200 (1)

NOTES:
(1) Use annealed material only.
(2) For forgings, the chemical composition, mechanical properties, heat treating requirements, and grain size requirements shall conform to the applicable ASTM specification. The manufacturing procedures, tolerances, tests, certification, and markings shall be in accordance with ASTM B 564.

A – Standard Class

Temperature, °F	Working Pressures by Class, psig						
	150	300	600	900	1500	2500	4500
−20 to 100	185	480	960	1,440	2,400	4,000	7,200
200	185	480	960	1,440	2,400	4,000	7,200
300	185	480	960	1,440	2,400	4,000	7,200
400	185	480	960	1,440	2,400	4,000	7,200
500	170	455	905	1,360	2,270	3,780	6,805
600	140	415	825	1,240	2,065	3,440	6,190

B – Special Class

Temperature, °F	Working Pressures by Class, psig						
	150	300	600	900	1500	2500	4500
100	205	535	1,070	1,605	2,680	4,465	8,035
200	205	535	1,070	1,605	2,680	4,465	8,035
300	205	535	1,070	1,605	2,680	4,465	8,035
400	205	535	1,070	1,605	2,680	4,465	8,035
500	195	505	1,015	1,520	2,530	4,220	7,595
600	175	460	920	1,380	2,305	3,840	6,910

Table VII-2-3.3 Ratings for Group 3.3 Materials

B 160 Gr. N02201 (1)(2)	B 162 Gr. N02201 (1)

NOTES:
(1) Use annealed material only.
(2) For forgings, the chemical composition, mechanical properties, heat treating requirements, and grain size requirements shall conform to the applicable ASTM specification. The manufacturing procedures, tolerances, tests, certification, and markings shall be in accordance with ASTM B 564.

A – Standard Class

Temperature, °F	Working Pressures by Class, psig						
	150	300	600	900	1500	2500	4500
−20 to 100	90	240	480	720	1,200	2,000	3,600
200	90	230	460	690	1,150	1,920	3,455
300	85	225	450	675	1,130	1,880	3,385
400	85	225	450	655	1,130	1,880	3,385
500	85	225	450	655	1,130	1,880	3,385
600	85	225	450	675	1,130	1,880	3,385
650	85	225	445	670	1,115	1,860	3,350
700	85	225	445	670	1,115	1,860	3,350
750	85	220	440	660	1,105	1,840	3,310
800	80	215	430	650	1,080	1,800	3,240
850	65	210	420	635	1,055	1,760	3,170
900	50	205	415	620	1,030	1,720	3,095
950	35	195	395	590	985	1,640	2,950
1000	20	190	380	570	950	1,580	2,845
1050	20	80	165	245	410	685	1,235
1100	20	70	135	205	345	570	1,030
1150	20	50	105	155	255	430	770
1200	15	40	80	125	205	345	615

GENERAL NOTE:
(a) Flanged end ratings terminate at 1000°F.

B – Special Class

Temperature, °F	Working Pressures by Class, psig						
	150	300	600	900	1500	2500	4500
−20 to 100	105	270	535	805	1,340	2,230	4,020
200	100	255	515	770	1,285	2,145	3,855
300	95	250	505	755	1,260	2,100	3,775
400	95	250	505	755	1,260	2,100	3,775
500	95	250	505	755	1,260	2,100	3,775
600	95	250	505	755	1,260	2,100	3,775
650	95	250	500	745	1,245	2,075	3,735
700	95	250	500	745	1,245	2,075	3,735
750	95	245	495	740	1,130	2,055	3,695
800	90	240	480	725	1,205	2,010	3,615
850	90	235	470	705	1,180	1,965	3,535
900	90	230	460	690	1,150	1,920	3,455
950	85	220	440	660	1,100	1,830	3,295
1000	80	210	425	635	1,060	1,765	3,175
1050	40	105	205	310	515	855	1,545
1100	35	85	170	255	430	715	1,285
1150	25	65	130	195	320	535	965
1200	20	50	105	155	255	430	770

Table VII-2-3.4 Ratings for Group 3.4 Materials

B 127 Gr. N04400 (1)	B 164 Gr. N04400 (1)	B 165 Gr. N04400 (1)	B 564 Gr. N04400 (1)
B 163 Gr. N04400 (1)	B 164 Gr. N04405 (1)(2)		

NOTES:
(1) Use annealed material only.
(2) For forgings, the chemical composition, mechanical properties, heat treating requirements, and grain size requirements shall conform to the applicable ASTM specification. The manufacturing procedures, tolerances, tests, certification, and markings shall be in accordance with ASTM B 564.

A – Standard Class

Temperature, °F	Working Pressures by Class, psig						
	150	300	600	900	1500	2500	4500
−20 to 100	230	600	1,200	1,800	3,000	5,000	9,000
200	200	525	1,050	1,575	2,630	4,380	7,885
300	190	490	980	1,470	2,450	4,080	7,345
400	180	475	945	1,420	2,365	3,940	7,090
500	170	475	945	1,420	2,365	3,940	7,090
600	140	475	945	1,420	2,365	3,940	7,090
650	125	475	945	1,420	2,365	3,940	7,090
700	110	470	940	1,410	2,350	3,920	7,055
750	95	465	930	1,395	2,330	3,880	6,985
800	80	460	915	1,375	2,290	3,820	6,875
850	65	375	755	1,130	1,885	3,145	5,655
900	50	275	550	825	1,370	2,285	4,115

B – Special Class

Temperature, °F	Working Pressures by Class, psig						
	150	300	600	900	1500	2500	4500
−20 to 100	255	670	1,340	2,010	3,350	5,580	10,045
200	225	585	1,175	1,760	2,935	4,890	8,800
300	210	545	1,095	1,640	2,730	4,555	8,195
400	200	530	1,055	1,585	2,640	4,395	7,915
500	200	530	1,055	1,585	2,640	4,395	7,915
600	200	530	1,055	1,585	2,640	4,395	7,915
650	200	530	1,055	1,585	2,640	4,395	7,915
700	200	525	1,050	1,575	2,625	4,375	7,875
750	200	520	1,040	1,560	2,600	4,330	7,795
800	195	510	1,025	1,535	2,560	4,265	7,675
850	180	470	945	1,415	2,355	3,930	7,070
900	130	345	685	1,030	1,715	2,855	5,145

Table VII-2-3.5 Ratings for Group 3.5 Materials

B 163 Gr. N06600 (1)	B 166 Gr. N06600 (1)	B 168 Gr. N06600 (1)	B 564 Gr. N06600 (1)

NOTE:
(1) Use annealed material only.

A – Standard Class

Temperature, °F	Working Pressures by Class, psig						
	150	300	600	900	1500	2500	4500
−20 to 100	290	750	1,500	2,250	3,750	6,250	11,250
200	260	750	1,500	2,250	3,750	6,250	11,250
300	230	730	1,455	2,185	3,640	6,070	10,925
400	200	705	1,410	2,115	3,530	5,880	10,585
500	170	665	1,330	1,995	3,325	5,540	9,965
600	140	605	1,210	1,815	3,025	5,040	9,070
650	125	590	1,175	1,765	2,940	4,905	8,825
700	110	570	1,135	1,705	2,840	4,730	8,515
750	95	530	1,065	1,595	2,660	4,430	7,970
800	80	510	1,015	1,525	2,540	4,230	7,610
850	65	485	975	1,460	2,435	4,060	7,305
900	50	450	900	1,350	2,245	3,745	6,740
950	35	365	725	1,090	1,815	3,030	5,450
1000	20	240	480	720	1,200	2,000	3,600
1050	20	155	310	465	770	1,285	2,315
1100	20	105	205	310	515	855	1,545
1150	20	75	150	225	375	630	1,130
1200	20	70	135	205	345	570	1,030

GENERAL NOTE:
(a) Flanged end valve ratings terminate at 1000°F.

B – Special Class

Temperature, °F	Working Pressures by Class, psig						
	150	300	600	900	1500	2500	4500
−20 to 100	290	750	1,500	2,250	3,750	6,250	11,250
200	290	750	1,500	2,250	3,750	6,250	11,250
300	290	750	1,500	2,250	3,750	6,250	11,250
400	290	750	1,500	2,250	3,750	6,250	11,250
500	290	750	1,500	2,250	3,750	6,250	11,250
600	290	750	1,500	2,250	3,750	6,250	11,250
650	290	750	1,500	2,250	3,750	6,250	11,250
700	280	735	1,465	2,200	3,665	6,110	10,995
750	280	730	1,460	2,185	3,645	6,070	10,930
800	275	720	1,440	2,160	3,600	6,000	10,800
850	260	680	1,355	2,030	3,385	5,645	10,160
900	230	600	1,200	1,800	3,000	5,000	9,000
950	175	455	910	1,365	2,270	3,785	6,815
1000	115	300	600	900	1,500	2,500	4,500
1050	75	195	385	580	965	1,605	2,895
1100	50	130	255	385	645	1,070	1,930
1150	35	95	190	285	470	785	1,415
1200	35	85	170	255	430	715	1,285

Table VII-2-3.6 Ratings for Group 3.6 Materials

B 163 Gr. N08800 (1)	B 408 Gr. N08800 (1)	B 409 Gr. N08800 (1)	B 564 Gr. N08800 (1)

NOTE:
(1) Use annealed material only.

A – Standard Class

Temperature, °F	Working Pressures by Class, psig						
	150	300	600	900	1500	2500	4500
−20 to 100	275	720	1,440	2,160	3,600	6,000	10,800
200	255	665	1,330	1,995	3,325	5,540	9,970
300	230	640	1,275	1,915	3,190	5,320	9,575
400	200	620	1,240	1,860	3,095	5,160	9,290
500	170	600	1,205	1,805	3,010	5,020	9,035
600	140	590	1,175	1,765	2,940	4,900	8,820
650	125	580	1,155	1,735	2,890	4,820	8,675
700	110	570	1,135	1,705	2,840	4,730	8,515
750	95	530	1,065	1,595	2,660	4,430	7,970
800	80	510	1,015	1,525	2,540	4,230	7,610
850	65	485	975	1,460	2,435	4,060	7,305
900	50	450	900	1,350	2,245	3,745	6,740
950	35	385	775	1,160	1,930	3,220	5,795
1000	20	365	725	1,090	1,820	3,030	5,450
1050	20	360	720	1,080	1,800	3,000	5,400
1100	20	325	645	965	1,610	2,685	4,835
1150	20	275	550	825	1,370	2,285	4,115
1200	20	205	410	620	1,030	1,715	3,085
1250	20	145	290	430	720	1,200	2,160
1300	20	70	135	205	345	570	1,030
1350	20	50	110	165	275	455	825
1400	15	40	75	115	190	315	565
1450	15	35	70	105	170	285	515
1500	10	25	55	80	135	230	410

GENERAL NOTE:
(a) Flanged end valve ratings terminate at 1000°F.

Table VII-2-3.6 Ratings for Group 3.6 Materials (cont'd)

B 163 Gr. N08800 (1)	B 408 Gr. N08800 (1)	B 409 Gr. N08800 (1)	B 564 Gr. N08800 (1)

NOTE:
(1) Use annealed material only.

B – Special Class

Temperature, °F	Working Pressures by Class, psig						
	150	300	600	900	1500	2500	4500
−20 to 100	290	750	1,500	2,250	3,750	6,250	11,250
200	285	740	1,485	2,225	3,710	6,185	11,130
300	275	715	1,425	2,140	3,565	5,940	10,690
400	265	690	1,380	2,075	3,455	5,760	10,365
500	260	670	1,345	2,015	3,360	5,605	10,085
600	250	655	1,315	1,970	3,280	5,470	9,845
650	245	645	1,290	1,935	3,230	5,380	9,685
700	245	640	1,275	1,915	3,190	5,315	9,565
750	240	630	1,260	1,890	3,145	5,245	9,440
800	240	620	1,245	1,865	3,105	5,180	9,320
850	235	615	1,225	1,840	3,065	5,110	9,200
900	230	600	1,200	1,800	3,000	5,000	9,000
950	180	470	945	1,415	2,360	3,930	7,070
1000	160	420	840	1,260	2,105	3,505	6,310
1050	160	420	840	1,260	2,105	3,505	6,310
1100	155	405	805	1,210	2,015	3,360	6,045
1150	130	345	685	1,030	1,715	2,860	5,145
1200	100	260	515	770	1,285	2,145	3,860
1250	70	180	360	540	900	1,500	2,700
1300	35	85	170	255	430	715	1,285
1350	25	70	135	205	345	570	1,030
1400	20	45	95	140	235	395	705
1450	15	45	85	130	215	355	645
1500	15	35	70	105	170	285	515

Table VII-2-3.7 Ratings for Group 3.7 Materials

B 333 Gr. N10665 (1)	B 335 Gr. N10675 (1)(2)	B 564 Gr. N10665 (1)	B 622 Gr. N10675 (1)
B 333 Gr. N10675 (1)	B 462 Gr. N10665 (1)	B 564 Gr. N10675 (1)	
B 335 Gr. N10665 (1)(2)	B 462 Gr. N10675 (1)	B 622 Gr. N10665 (1)	

NOTES:
(1) Use solution annealed material only.
(2) For forgings, the chemical composition, mechanical properties, heat treating requirements, and grain size requirements shall conform to the applicable ASTM specification. The manufacturing procedures, tolerances, tests, certification, and markings shall be in accordance with ASTM B 564.

A – Standard Class

Temperature, °F	Working Pressures by Class, psig						
	150	300	600	900	1500	2500	4500
−20 to 100	290	750	1,500	2,250	3,750	6,250	11,250
200	260	750	1,500	2,250	3,750	6,250	11,250
300	230	730	1,455	2,185	3,640	6,070	10,925
400	200	705	1,410	2,115	3,530	5,880	10,585
500	170	665	1,330	1,995	3,325	5,540	9,965
600	140	605	1,210	1,815	3,025	5,040	9,070
650	125	590	1,175	1,765	2,940	4,905	8,825
700	110	570	1,135	1,705	2,840	4,730	8,515
750	95	530	1,065	1,595	2,660	4,430	7,970
800	80	510	1,015	1,525	2,540	4,230	7,610

B – Special Class

Temperature, °F	Working Pressures by Class, psig						
	150	300	600	900	1500	2500	4500
−20 to 100	290	750	1,500	2,250	3,750	6,250	11,250
200	290	750	1,500	2,250	3,750	6,250	11,250
300	290	750	1,500	2,250	3,750	6,250	11,250
400	290	750	1,500	2,250	3,750	6,250	11,250
500	290	750	1,500	2,250	3,750	6,250	11,250
600	290	750	1,500	2,250	3,750	6,250	11,250
650	290	750	1,500	2,250	3,750	6,250	11,250
700	280	735	1,465	2,200	3,665	6,110	10,995
750	280	730	1,460	2,185	3,645	6,070	10,930
800	275	720	1,440	2,160	3,600	6,000	10,800

Table VII-2-3.8 Ratings for Group 3.8 Materials

B 333 Gr. N10001 (1)(2)	B 446 Gr. N06625 (3)(4)	B 564 Gr. N10276 (1)(5)	B 575 Gr. N06455 (1)(2)
B 335 Gr. N10001 (1)(2)(6)	B 462 Gr. N06022 (1)(5)	B 573 Gr. N10003 (3)(6)	B 575 Gr. N10276 (1)(5)
B 423 Gr. N08825 (3)(7)	B 462 Gr. N06200 (1)(2)	B 574 Gr. N06022 (1)(5)(6)	B 622 Gr. N06022 (1)(5)
B 424 Gr. N08825 (3)(7)	B 462 Gr. N10276 (1)(5)	B 574 Gr. N06200 (1)(2)(6)	B 622 Gr. N06200 (1)(2)
B 425 Gr. N08825 (3)(6)(7)	B 564 Gr. N06022 (1)(5)	B 574 Gr. N06455 (1)(2)(6)	B 622 Gr. N06455 (1)(2)
B 434 Gr. N10003 (3)	B 564 Gr. N06200 (1)(2)	B 574 Gr. N10276 (1)(5)(6)	B 622 Gr. N10001 (2)(3)
B 443 Gr. N06625 (3)(4)	B 564 Gr. N06625 (3)(4)	B 575 Gr. N06022 (1)(5)	B 622 Gr. N10276 (1)(5)
	B 564 Gr. N08825 (3)(7)	B 575 Gr. N06200 (1)(2)	

NOTES:
(1) Use solution annealed material only.
(2) Not to be used over 800°F.
(3) Use annealed material only.
(4) Not to be used over 1200°F. Alloy N06625 in the annealed condition is subject to severe loss of impact strength at room temperatures after exposure in the range of 1000°F to 1400°F.
(5) Not to be used over 1250°F.
(6) For forgings, the chemical composition, mechanical properties, heat treating requirements, and grain size requirements shall conform to the applicable ASTM specification. The manufacturing procedures, tolerances, tests, certification, and markings shall be in accordance with ASTM B 564.
(7) Not to be used over 1000°F.

A – Standard Class

Temperature, °F	Working Pressures by Class, psig						
	150	300	600	900	1500	2500	4500
−20 to 100	290	750	1,500	2,250	3,750	6,250	11,250
200	260	750	1,500	2,250	3,750	6,250	11,250
300	230	730	1,455	2,185	3,640	6,070	10,925
400	200	700	1,395	2,095	3,490	5,820	10,475
500	170	665	1,330	1,995	3,325	5,540	9,965
600	140	605	1,210	1,815	3,025	5,040	9,070
650	125	590	1,175	1,765	2,940	4,905	8,825
700	110	570	1,135	1,705	2,840	4,730	8,515
750	95	530	1,065	1,595	2,660	4,430	7,970
800	80	510	1,015	1,525	2,540	4,230	7,610
850	65	485	975	1,460	2,435	4,060	7,305
900	50	450	900	1,350	2,245	3,745	6,740
950	35	385	775	1,160	1,930	3,220	5,795
1000	20	365	725	1,090	1,820	3,030	5,450
1050	20	360	720	1,080	1,800	3,000	5,400
1100	20	325	645	965	1,610	2,685	4,835
1150	20	275	550	825	1,370	2,285	4,115
1200	20	205	410	615	1,030	1,715	3,085
1250	20	165	330	495	825	1,370	2,470
1300	20	120	240	360	600	1,000	1,800

GENERAL NOTE:
(a) Flanged end valve ratings terminate at 1000°F.

Table VII-2-3.8 Ratings for Group 3.8 Materials (Cont'd)

B 333 Gr. N10001 (1)(2)	B 446 Gr. N06625 (3)(4)	B 564 Gr. N10276 (1)(5)	B 575 Gr. N06455 (1)(2)
B 335 Gr. N10001 (1)(2)(6)	B 462 Gr. N06022 (1)(5)	B 573 Gr. N10003 (3)(6)	B 575 Gr. N10276 (1)(5)
B 423 Gr. N08825 (3)(7)	B 462 Gr. N06200 (1)(2)	B 574 Gr. N06022 (1)(5)(6)	B 622 Gr. N06022 (1)(5)
B 424 Gr. N08825 (3)(7)	B 462 Gr. N10276 (1)(5)	B 574 Gr. N06200 (1)(2)(6)	B 622 Gr. N06200 (1)(2)
B 425 Gr. N08825 (3)(6)(7)	B 564 Gr. N06022 (1)(5)	B 574 Gr. N06455 (1)(2)(6)	B 622 Gr. N06455 (1)(2)
B 434 Gr. N10003 (3)	B 564 Gr. N06200 (1)(2)	B 574 Gr. N10276 (1)(5)(6)	B 622 Gr. N10001 (2)(3)
B 443 Gr. N06625 (3)(4)	B 564 Gr. N06625 (3)(4)	B 575 Gr. N06022 (1)(5)	B 622 Gr. N10276 (1)(5)
	B 564 Gr. N08825 (3)(7)	B 575 Gr. N06200 (1)(2)	

NOTES:
(1) Use solution annealed material only.
(2) Not to be used over 800°F.
(3) Use annealed material only.
(4) Not to be used over 1200°F. Alloy N06625 in the annealed condition is subject to severe loss of impact strength at room temperatures after exposure in the range of 1000°F to 1400°F.
(5) Not to be used over 1250°F.
(6) For forgings, the chemical composition, mechanical properties, heat treating requirements, and grain size requirements shall conform to the applicable ASTM specification. The manufacturing procedures, tolerances, tests, certification, and markings shall be in accordance with ASTM B 564.
(7) Not to be used over 1000°F.

B – Special Class

Temperature, °F	Working Pressures by Class, psig						
	150	300	600	900	1500	2500	4500
−20 to 100	290	750	1,500	2,250	3,750	6,250	11,250
200	290	750	1,500	2,250	3,750	6,250	11,250
300	290	750	1,500	2,250	3,750	6,250	11,250
400	290	750	1,500	2,250	3,750	6,250	11,250
500	285	745	1,490	2,235	3,725	6,205	11,170
600	275	715	1,430	2,145	3,575	5,960	10,730
650	270	705	1,410	2,115	3,520	5,870	10,565
700	265	695	1,395	2,090	3,480	5,805	10,445
750	265	690	1,375	2,065	3,440	5,735	10,325
800	265	685	1,370	2,055	3,430	5,715	10,285
850	260	675	1,355	2,030	3,385	5,645	10,160
900	230	600	1,200	1,800	3,000	5,000	9,000
950	180	470	945	1,415	2,360	3,930	7,070
1000	160	420	840	1,260	2,105	3,505	6,310
1050	160	420	840	1,260	2,105	3,505	6,310
1100	155	405	805	1,210	2,015	3,360	6,045
1150	130	345	685	1,030	1,715	2,860	5,145
1200	100	255	515	770	1,285	2,145	3,855
1250	80	205	410	615	1,030	1,715	3,085
1300	60	150	300	450	750	1,250	2,250

Table VII-2-3.9 Ratings for Group 3.9 Materials

B 435 Gr. N06002 (1)	B 572 Gr. N06002 (1)(2)	B 622 Gr. N06002 (1)

NOTES:
(1) Use solution annealed material only.
(2) For forgings, the chemical composition, mechanical properties, heat treating requirements, and grain size requirements shall conform to the applicable ASTM specification. The manufacturing procedures, tolerances, tests, certification, and markings shall be in accordance with ASTM B 564.

A – Standard Class

Temperature, °F	Working Pressures by Class, psig						
	150	300	600	900	1500	2500	4500
−20 to 100	290	750	1,500	2,250	3,750	6,250	11,250
200	260	750	1,500	2,250	3,750	6,250	11,250
300	230	690	1,380	2,075	3,455	5,760	10,370
400	200	640	1,275	1,915	3,190	5,320	9,575
500	170	595	1,190	1,785	2,975	4,960	8,930
600	140	565	1,130	1,690	2,820	4,700	8,460
650	125	550	1,105	1,655	2,760	4,600	8,280
700	110	540	1,085	1,625	2,710	4,520	8,135
750	95	530	1,065	1,595	2,660	4,430	7,970
800	80	510	1,015	1,525	2,540	4,230	7,610
850	65	485	975	1,460	2,435	4,060	7,305
900	50	450	900	1,350	2,245	3,745	6,740
950	35	385	775	1,160	1,930	3,220	5,795
1000	20	365	725	1,090	1,820	3,030	5,450
1050	20	360	720	1,080	1,800	3,000	5,400
1100	20	325	645	965	1,610	2,685	4,835
1150	20	275	550	825	1,370	2,285	4,115
1200	20	205	410	620	1,030	1,715	3,085
1250	20	180	365	545	910	1,515	2,725
1300	20	140	275	410	685	1,145	2,060
1350	20	105	205	310	515	860	1,545
1400	20	75	150	225	380	630	1,130
1450	20	60	115	175	290	485	875
1500	15	40	85	125	205	345	620

Table VII-2-3.9 Ratings for Group 3.9 Materials (Cont'd)

B 435 Gr. N06002 (1)	B 572 Gr. N06002 (1)(2)	B 622 Gr. N06002 (1)

NOTES:
(1) Use solution annealed material only.
(2) For forgings, the chemical composition, mechanical properties, heat treating requirements, and grain size requirements shall conform to the applicable ASTM specification. The manufacturing procedures, tolerances, tests, certification, and markings shall be in accordance with ASTM B 564.

B – Special Class

Temperature, °F	Working Pressures by Class, psig						
	150	300	600	900	1500	2500	4500
−20 to 100	290	750	1,500	2,250	3,750	6,250	11,250
200	290	750	1,500	2,250	3,750	6,250	11,250
300	290	750	1,500	2,250	3,750	6,250	11,250
400	275	715	1,425	2,140	3,565	5,940	10,690
500	255	665	1,330	1,995	3,320	5,535	9,965
600	240	630	1,260	1,890	3,145	5,245	9,440
650	235	615	1,230	1,850	3,080	5,135	9,240
700	230	605	1,210	1,815	3,025	5,045	9,080
750	230	595	1,195	1,790	2,985	4,980	8,960
800	225	590	1,185	1,775	2,960	4,935	8,880
850	225	585	1,175	1,760	2,935	4,890	8,800
900	225	580	1,165	1,745	2,905	4,845	8,720
950	180	470	945	1,415	2,360	3,930	7,070
1000	160	420	840	1,260	2,105	3,505	6,310
1050	160	420	840	1,260	2,105	3,505	6,310
1100	155	405	805	1,210	2,015	3,360	6,045
1150	130	345	685	1,030	1,715	2,860	5,145
1200	100	260	515	770	1,285	2,145	3,860
1250	90	230	455	680	1,135	1,895	3,410
1300	65	170	345	515	860	1,430	2,570
1350	50	130	260	385	645	1,070	1,930
1400	35	95	90	285	470	785	1,415
1450	30	75	45	220	365	610	1,095
1500	20	50	105	155	260	430	770

Table VII-2-3.10 Ratings for Group 3.10 Materials

B 599 Gr. N08700 (1)	B 672 Gr. N08700 (1)(2)

NOTES:
(1) Use solution annealed material only.
(2) For forgings, the chemical composition, mechanical properties, heat treating requirements, and grain size requirements shall conform to the applicable ASTM specification. The manufacturing procedures, tolerances, tests, certification, and markings shall be in accordance with ASTM B 564.

A – Standard Class

Temperature, °F	Working Pressures by Class, psig						
	150	300	600	900	1500	2500	4500
−20 to 100	290	750	1,500	2,250	3,750	6,250	11,250
200	260	750	1,500	2,250	3,750	6,250	11,250
300	230	685	1,370	2,050	3,420	5,700	10,260
400	200	640	1,275	1,915	3,190	5,320	9,575
500	170	615	1,235	1,850	3,085	5,140	9,250
600	140	595	1,185	1,780	2,965	4,940	8,990
650	125	570	1,140	1,715	2,855	4,760	8,570

B – Special Class

Temperature, °F	Working Pressures by Class, psig						
	150	300	600	900	1500	2500	4500
−20 to 100	290	750	1,500	2,250	3,750	6,250	11,250
200	290	750	1,500	2,250	3,750	6,250	11,250
300	290	750	1,500	2,250	3,750	6,250	11,250
400	275	715	1,425	2,140	3,565	5,940	10,690
500	265	690	1,375	2,065	3,440	5,735	10,325
600	255	660	1,325	1,985	3,310	5,515	9,925
650	245	640	1,275	1,915	3,190	5,315	9,565

Table VII-2-3.11 Ratings for Group 3.11 Materials

B 625 Gr. N08904 (1)	B 649 Gr. N08904 (1)(2)	B 677 Gr. N08904 (1)

NOTES:
(1) Use annealed material only.
(2) For forgings, the chemical composition, mechanical properties, heat treating requirements, and grain size requirements shall conform to the applicable ASTM specification. The manufacturing procedures, tolerances, tests, certification, and markings shall be in accordance with ASTM B 564.

A – Standard Class

Temperature, °F	Working Pressures by Class, psig						
	150	300	600	900	1500	2500	4500
−20 to 100	285	745	1,490	2,230	3,720	6,200	11,160
200	230	600	1,205	1,805	3,010	5,020	9,035
300	210	545	1,090	1,635	2,725	4,540	8,170
400	190	500	1,000	1,500	2,495	4,160	7490
500	170	455	910	1,370	2,280	3,800	6,840
600	140	425	855	1,280	2,135	3,560	6,410
650	125	420	835	1,255	2,090	3,480	6,265
700	110	410	820	1,230	2,050	3,420	6,155

B – Special Class

Temperature, °F	Working Pressures by Class, psig						
	150	300	600	900	1500	2500	4500
−20 to 100	290	750	1,500	2,250	3,750	6,250	11,250
200	260	670	1,345	2,015	3,360	5,605	10,085
300	235	610	1,215	1,825	3,040	5,065	9,120
400	215	555	1,115	1,670	2,785	4,645	8,355
500	195	510	1,020	1,525	2,545	4,240	7,635
600	185	475	955	1,430	2,385	3,975	7,150
650	180	465	930	1,400	2,330	3,885	6,990
700	175	460	915	1,375	2,290	3,815	6,870

Table VII-2-3.12 Ratings for Group 3.12 Materials

A 351 Gr. CN3MN (1)	B 582 Gr. N06985 (1)	B 622 Gr. N06985 (1)	B 688 Gr. N08367 (1)
B 462 Gr. N08367 (1)	B 620 Gr. N08320 (1)	B 622 Gr. N08320 (1)	
B 581 Gr. N06985 (1)(2)	B 621 Gr. N08320 (1)(2)		

NOTES:
(1) Use solution annealed material only.
(2) For forgings, the chemical composition, mechanical properties, heat treating requirements, and grain size requirements shall conform to the applicable ASTM specification. The manufacturing procedures, tolerances, tests, certification, and markings shall be in accordance with ASTM B 564.

A – Standard Class

Temperature, °F	Working Pressures by Class, psig						
	150	300	600	900	1500	2500	4500
−20 to 100	260	670	1,345	2,015	3,360	5,600	10,080
200	240	620	1,245	1,865	3,110	5,180	9,325
300	225	585	1,165	1,750	2,915	4,860	8,750
400	200	540	1,075	1,615	2,690	4,480	8,065
500	170	500	1,000	1,500	2,495	4,160	7,490
600	140	475	945	1,420	2,365	3,940	7,090
650	125	460	920	1,380	2,305	3,840	6,910
700	110	450	900	1,355	2,255	3,760	6,770
750	95	440	885	1,325	2,210	3,680	6,625
800	80	430	865	1,295	2,160	3,600	6,480

B – Special Class

Temperature, °F	Working Pressures by Class, psig						
	150	300	600	900	1500	2500	4500
−20 to 100	290	750	1,500	2,250	3,750	6,250	11,250
200	265	695	1,390	2,080	3,470	5,780	10,405
300	250	650	1,300	1,955	3,255	5,425	9,765
400	230	600	1,200	1,800	3,000	5,000	9,000
500	215	555	1,115	1,670	2,785	4,645	8,355
600	200	530	1,055	1,585	2,640	4,395	7,915
650	195	515	1,030	1,545	2,570	4,285	7,715
700	195	505	1,005	1,510	2,520	4,195	7,555
750	190	495	985	1,480	2,465	4,105	7,395
800	185	480	965	1,445	2,410	4,020	7,230

Table VII-2-3.13 Ratings for Group 3.13 Materials

B 564 Gr. N08031 (1)	B 581 Gr. N06975 (2)(3)	B 582 Gr. N06975 (2)	B 622 Gr. N06975 (2)
B 625 Gr. N08031 (1)	B 622 Gr. N08031 (1)	B 649 Gr. N08031 (1)(3)	

NOTES:
(1) Use annealed material only.
(2) Use solution annealed material only.
(3) For forgings, the chemical composition, mechanical properties, heat treating requirements, and grain size requirements shall conform to the applicable ASTM specification. The manufacturing procedures, tolerances, tests, certification, and markings shall be in accordance with ASTM B 564.

A – Standard Class

Temperature, °F	Working Pressures by Class, psig						
	150	300	600	900	1500	2500	4500
−20 to 100	290	750	1,500	2,250	3,750	6,250	11,250
200	260	705	1,405	2,110	3,515	5,860	10,550
300	230	665	1,330	1,995	3,325	5,540	9,970
400	200	630	1,260	1,885	3,145	5,240	9,430
500	170	595	1,190	1,785	2,975	4,960	8,930
600	140	560	1,125	1,685	2,810	4,680	8,425
650	125	550	1,100	1,650	2,750	4,580	8,245
700	110	540	1,080	1,620	2,700	4,500	8,100
750	95	530	1,065	1,595	2,660	4,430	7,970
800	80	510	1,015	1,525	2,540	4,230	7,610

B – Special Class

Temperature, °F	Working Pressures by Class, psig						
	150	300	600	900	1500	2500	4500
−20 to 100	290	750	1,500	2,250	3,750	6,250	11,250
200	290	750	1,500	2,250	3,750	6,250	11,250
300	285	740	1,485	2,225	3,710	6,185	11,130
400	270	700	1,405	2,105	3,510	5,850	10,525
500	255	665	1,330	1,995	3,320	5,535	9,965
600	240	625	1,255	1,880	3,135	5,225	9,400
650	235	615	1,225	1,840	3,065	5,110	9,200
700	230	605	1,205	1,810	3,015	5,020	9,040
750	230	595	1,190	1,785	2,975	4,955	8,920
800	225	590	1,180	1,770	2,945	4,910	8,840

Table VII-2-3.14 Ratings for Group 3.14 Materials

B 462 Gr. N06030 (1)(3)	B 581 Gr. N06030 (1)(2)(3)	B 582 Gr. N06030 (1)(3)	B 622 Gr. N06030 (1)(3)
B 581 Gr. N06007 (1)(2)	B 582 Gr. N06007 (1)	B 622 Gr. N06007 (1)	

NOTES:
(1) Use solution annealed material only.
(2) For forgings, the chemical composition, mechanical properties, heat treating requirements, and grain size requirements shall conform to the applicable ASTM specification. The manufacturing procedures, tolerances, tests, certification, and markings shall be in accordance with ASTM B 564.
(3) Not to be used over 800°F.

A – Standard Class

Temperature, °F	Working Pressures by Class, psig						
	150	300	600	900	1500	2500	4500
−20 to 100	275	720	1,440	2,160	3,600	6,000	10,800
200	250	650	1,295	1,945	3,240	5,400	9,720
300	230	600	1,200	1,800	3,000	5,000	9,000
400	200	565	1,130	1,690	2,820	4,700	8,460
500	170	540	1,075	1,615	2,690	4,480	8,065
600	140	520	1,035	1,555	2,590	4,320	7,775
650	125	510	1,020	1,535	2,555	4,260	7,670
700	110	505	1,015	1,520	2,530	4,220	7,595
750	95	500	1,005	1,505	2,510	4,180	7,525
800	80	500	1,000	1,500	2,495	4,160	7,490
850	65	485	975	1,460	2,435	4,060	7,305
900	50	450	900	1,350	2,245	3,745	6,740
950	35	385	775	1,160	1,930	3,220	5,795
1000	20	365	725	1,090	1,820	3,030	5,450

B – Special Class

Temperature, °F	Working Pressures by Class, psig						
	150	300	600	900	1500	2500	4500
−20 to 100	290	750	1,500	2,250	3,750	6,250	11,250
200	275	725	1,445	2,170	3,615	6,025	10,850
300	255	670	1,340	2,010	3,350	5,580	10,045
400	240	630	1,260	1,890	3,145	5,245	9,440
500	230	600	1,200	1,800	3,000	5,000	9,000
600	220	580	1,155	1,735	2,895	4,820	8,680
650	220	570	1,140	1,710	2,855	4,755	8,560
700	215	565	1,130	1,695	2,825	4,710	8,480
750	215	560	1,120	1,680	2,800	4,665	8,395
800	215	555	1,115	1,670	2,785	4,645	8,355
850	210	555	1,110	1,665	2,770	4,620	8,315
900	210	550	1,105	1,655	2,760	4,600	8,275
950	180	470	945	1,415	2,360	3,930	7,070
1000	160	420	840	1,260	2,105	3,505	6,310

Table VII-2-3.15 Ratings for Group 3.15 Materials

B 407 Gr. N08810 (1)	B 408 Gr. N08810 (1)(2)	B 409 Gr. N08810 (1)	B 564 Gr. N08810 (1)
A 494 Gr. N-12MV (1)(3)	A 494 Gr. CW-12MW (1)(3)		

NOTES:
(1) Use solution annealed material only.
(2) For forgings, the chemical composition, mechanical properties, heat treated requirements, and grain size requirements shall conform to the applicable ASTM specification. The manufacturing procedures, tolerance, tests, certification, and markings shall be in accordance with ASTM B 564.
(3) Not to be used over 1000°F.

A – Standard Class

Temperature, °F	Working Pressures by Class, psig						
	150	300	600	900	1500	2500	4500
−20 to 100	230	600	1,200	1,800	3,000	5,000	9,000
200	210	550	1,105	1,655	2,760	4,600	8,280
300	200	520	1,040	1,560	2,605	4,340	7,810
400	190	490	980	1,470	2,450	4,080	7,345
500	170	465	925	1,390	2,315	3,860	6,950
600	140	440	880	1,320	2,195	3,660	6,590
650	125	430	860	1,290	2,150	3,580	6,445
700	110	420	835	1,255	2,090	3,480	6,265
750	95	410	820	1,230	2,050	3,420	6,155
800	80	400	800	1,200	2,005	3,340	6,010
850	65	395	785	1,180	1,970	3,280	5,905
900	50	385	775	1,160	1,930	3,220	5,795
950	35	380	760	1,140	1,895	3,160	5,690
1000	20	365	725	1,090	1,820	3,030	5,450
1050	20	350	700	1,050	1,750	2,915	5,245
1100	20	325	645	965	1,610	2,685	4,835
1150	20	275	550	825	1,370	2,285	4,115
1200	20	205	410	620	1,030	1,715	3,085
1250	20	180	365	545	910	1,515	2,725
1300	20	140	275	410	685	1,145	2,060
1350	20	105	205	310	515	860	1,545
1400	20	75	150	225	380	630	1,130
1450	20	60	115	175	290	485	875
1500	15	40	85	125	205	345	620

GENERAL NOTE:
(a) Flanged end valve ratings terminate at 1000°F.

Table VII-2-3.15 Ratings for Group 3.15 Materials (Cont'd)

B 407 Gr. N08810 (1)	B 408 Gr. N08810 (2)	B 409 Gr. N08810 (1)	B 564 Gr. N08810 (1)
A 494 Gr. N-12MV (1)(3)	A 494 Gr. CW-12MW (1)(3)		

NOTES:
(1) Use solution annealed material only.
(2) For forgings, the chemical composition, mechanical properties, heat treated requirements, and grain size requirements shall conform to the applicable ASTM specification. The manufacturing procedures, tolerance, tests, certification, and markings shall be in accordance with ASTM B 564.
(3) Not to be used over 1000°F.

B – Special Class

Temperature, °F	Working Pressures by Class, psig						
	150	300	600	900	1500	2500	4500
−20 to 100	255	670	1,340	2,010	3,350	5,580	10,045
200	235	615	1,230	1,850	3,080	5,135	9,040
300	225	580	1,165	1,745	2,905	4,845	8,720
400	210	545	1,095	1,640	2,730	4,555	8,195
500	200	515	1,035	1,550	2,585	4,310	7,755
600	190	490	980	1,470	2,450	4,085	7,355
650	185	480	960	1,440	2,395	3,995	7,190
700	180	465	930	1,400	2,330	3,885	6,990
750	175	460	915	1,375	2,290	3,815	6,870
800	170	445	895	1,340	2,235	3,730	6,710
850	170	440	880	1,320	2,195	3,660	6,590
900	165	430	865	1,295	2,155	3,595	6,470
950	160	425	845	1,270	2,115	3,525	6,350
1000	160	415	830	1,245	2,075	3,460	6,230
1050	160	415	830	1,245	2,075	3,460	6,230
1100	155	405	805	1,210	2,015	3,360	6,045
1150	130	345	685	1,030	1,715	2,860	5,145
1200	100	260	515	770	1,285	2,145	3,860
1250	90	230	455	680	1,135	1,895	3,410
1300	65	170	345	515	860	1,430	2,570
1350	50	130	260	385	645	1,070	1,930
1400	35	95	190	285	470	785	1,415
1450	30	75	145	220	365	610	1,095
1500	20	50	105	155	260	430	770

Table VII-2-3.16 Ratings for Group 3.16 Materials

B 511 Gr. N08330 (1)(2)	B 535 Gr. N08330 (1)	B 536 Gr. N08330 (1)

NOTES:
(1) Use solution annealed material only.
(2) For forgings, the chemical composition, mechanical properties, heat treating requirements, and grain size requirements shall conform to the applicable ASTM specification. The manufacturing procedures, tolerances, tests, certification, and markings shall be in accordance with ASTM B 564.

A – Standard Class

Temperature, °F	Working Pressures by Class, psig						
	150	300	600	900	1500	2500	4500
−20 to 100	275	720	1,440	2,160	3,600	6,000	10,800
200	245	635	1,270	1,910	3,180	5,300	9,540
300	225	595	1,185	1,780	2,965	4,940	8,890
400	200	555	1,115	1,670	2,785	4,640	8,350
500	170	530	1,055	1,585	2,640	4,400	7,920
600	140	505	1,010	1,510	2,520	4,200	7,560
650	125	495	990	1,485	2,470	4,120	7,415
700	110	480	965	1,445	2,410	4,020	7,235
750	95	475	945	1,420	2,365	3,940	7,090
800	80	465	925	1,390	2,315	3,860	6,950
850	65	455	905	1,360	2,270	3,780	6,805
900	50	445	890	1,330	2,220	3,700	6,660
950	35	385	775	1,160	1,930	3,220	5,795
1000	20	365	725	1,090	1,820	3,030	5,450
1050	20	345	685	1,030	1,715	2,855	5,145
1100	20	265	535	800	1,335	2,230	4,010
1150	20	205	410	615	1,030	1,715	3,085
1200	20	160	320	485	805	1,345	2,415
1250	20	130	260	390	650	1,085	1,955
1300	20	105	215	320	530	885	1,595
1350	20	80	165	245	410	685	1,235
1400	20	60	125	185	310	515	925
1450	20	50	105	155	255	430	770
1500	15	40	75	115	190	315	565

GENERAL NOTE:
(a) Flanged end valve ratings terminate at 1000°F.

Table VII-2-3.16 Ratings for Group 3.16 Materials (Cont'd)

B 511 Gr. N08330 (1)(2)	B 535 Gr. N08330 (1)	B 536 Gr. N08330 (1)

NOTES:
(1) Use solution annealed material only.
(2) For forgings, the chemical composition, mechanical properties, heat treating requirements, and grain size requirements shall conform to the applicable ASTM specification. The manufacturing procedures, tolerances, tests, certification, and markings shall be in accordance with ASTM B 564.

B – Special Class

Temperature, °F	Working Pressures by Class, psig						
	150	300	600	900	1500	2500	4500
−20 to 100	290	750	1,500	2,250	3,750	6,250	11,250
200	270	710	1,420	2,130	3,550	5,915	10,645
300	255	660	1,325	1,985	3,310	5,515	9,925
400	240	620	1,245	1,865	3,105	5,180	9,320
500	225	590	1,180	1,770	2,945	4,910	8,840
600	215	565	1,125	1,690	2,815	4,690	8,440
650	210	550	1,105	1,655	2,760	4,600	8,275
700	205	540	1,075	1,615	2,690	4,485	8,075
750	200	530	1,055	1,585	2,640	4,395	7,915
800	200	515	1,035	1,550	2,585	4,310	7,755
850	195	505	1,015	1,520	2,530	4,220	7,595
900	190	495	990	1,485	2,480	4,130	7,435
950	180	470	945	1,415	2,360	3,930	7,070
1000	160	420	840	1,260	2,105	3,505	6,310
1050	160	420	840	1,260	2,015	3,305	6,310
1100	130	335	670	1,005	1,670	2,785	5,015
1150	100	255	515	770	1,285	2,145	3,855
1200	75	120	405	605	1,005	1,680	3,020
1250	60	165	325	490	815	1,355	2,445
1300	50	135	265	400	665	1,105	1,995
1350	40	105	205	310	515	855	1,545
1400	30	75	155	230	385	645	1,155
1450	25	65	130	195	320	535	965
1500	20	45	95	140	235	395	705

Table VII-2-3.17 Ratings for Group 3.17 Materials

A 351 Gr. CN7M (1)

NOTE:
(1) Use solution annealed material only.

A – Standard Class

Temperature, °F	Working Pressures by Class, psig						
	150	300	600	900	1500	2500	4500
−20 to 100	230	600	1,200	1,800	3,000	5,000	9,000
200	200	520	1,035	1,555	2,590	4,320	7,775
300	180	465	930	1,395	2,330	3,880	6,985
400	160	420	845	1,265	2,110	3,520	6,335
500	150	390	780	1,165	1,945	3,240	5,830
600	140	360	720	1,080	1,800	3,000	5,400

B – Special Class

Temperature, °F	Working Pressures by Class, psig						
	150	300	600	900	1500	2500	4500
−20 to 100	255	665	1,330	1,995	3,320	5,535	9,965
200	215	560	1,125	1,685	2,805	4,680	8,420
300	195	510	1,020	1,535	2,550	4,260	7,665
400	180	470	945	1,415	2,355	3,930	7,070
500	165	435	870	1,300	2,170	3,615	6,510
600	155	400	805	1,205	2,010	3,350	6,025

Table VII-2-3.18 Ratings for Group 3.18 Materials

B 167 Gr. N06600 (1)

NOTE:
(1) Only use annealed material.

A – Standard Class

Temperature, °F	Working Pressures by Class, psig						
	150	300	600	900	1500	2500	4500
−20 to 100	275	720	1,440	2,160	3,600	6,000	10,800
200	260	685	1,375	2,060	3,430	5,720	10,295
300	230	660	1,315	1,975	3,290	5,480	9,865
400	200	630	1,260	1,885	3,145	5,240	9,430
500	170	605	1,210	1,815	3,025	5,040	9,070
600	140	585	1,165	1,750	2,915	4,860	8,750
650	125	575	1,145	1,720	2,870	4,780	8,605
700	110	565	1,130	1,690	2,820	4,700	8,460
750	95	530	1,065	1,595	2,660	4,430	7,970
800	80	510	1,015	1,525	2,540	4,230	7,610
850	65	485	975	1,460	2,435	4,060	7,305
900	50	450	900	1,350	2,245	3,745	6,740
950	35	365	725	1,090	1,815	3,030	5,450
1000	20	240	480	720	1,200	2,000	3,600
1,050	20	155	310	465	770	1,285	2,315
1,100	20	105	205	310	515	855	1,545
1,150	20	75	150	225	375	630	1,130
1,200	20	70	135	205	345	570	1,030

GENERAL NOTE:
Flanged end valve ratings terminate at 1000°F.

B – Special Class

Temperature, °F	Working Pressures by Class, psig						
	150	300	600	900	1500	2500	4500
−20 to 100	290	750	1,500	2,250	3,750	6,250	11,250
200	290	750	1,500	2,250	3,750	6,250	11,250
300	280	735	1,470	2,200	3,670	6,115	11,010
400	270	700	1,405	2,105	3,510	5,850	10,525
500	260	675	1,350	2,025	3,375	5,625	10,125
600	250	650	1,300	1,955	3,255	5,425	9,765
650	245	640	1,280	1,920	3,200	5,335	9,605
700	240	630	1,260	1,890	3,145	5,245	9,440
750	240	620	1,245	1,865	3,105	5,180	9,320
800	235	615	1,225	1,840	3,065	5,110	9,200
850	230	605	1,210	1,815	3,025	5,045	9,080
900	230	595	1,195	1,790	2,985	4,980	8,960
950	175	455	910	1,365	2,270	3,785	6,815
1,000	115	300	600	900	1,500	2,500	4,500
1,050	75	195	385	580	965	1,605	2,895
1,100	50	130	255	385	645	1,070	1,930
1,150	35	95	190	285	470	785	1,415
1,200	35	85	170	255	430	715	1,285

MANDATORY APPENDIX VIII
REFERENCE STANDARDS AND SPECIFICATIONS

Standards and specifications referenced in this Standard are listed showing the year of approved issue. Products covered by each ASTM specification are listed for convenience. (See specifications for exact titles and detailed contents.)

API-598-1996, Valve Inspection and Test

Publisher: American Petroleum Institute (API), 1220 L Street NW, Washington, D.C. 20005

ASME B1.1-1989 (R2001), Unified Inch Screw Threads (UN and UNR Thread Form)
ANSI B1.20.1-1983 (R2001), Pipe Threads, General Purpose (Inch)
ASME B16.5-2002, Flanges and Flanged Fittings
ASME B16.10-2001, Face-to-Face and End-to-End Dimensions of Ferrous Valves
ASME B16.11-2001, Forged Steel Fittings, Socket-Welding and Threaded
ASME B16.20-2000, Ring-Joint Gaskets and Grooves for Steel Pipe Flanges
ASME B16.21-1992, Nonmetallic Flat Gaskets for Pipe Flanges
ASME B16.25-1997, Buttwelding Ends
ASME B18.2.1-1996), Square and Hex Bolts and Screws — Inch Series
ANSI B18.2.2-1987 (R1999), Square and Hex Nuts
ASME B31.3-2002, Chemical Plant and Petroleum Refinery Piping
ASME B36.10M-2001, Welded and Seamless Wrought Steel Pipe
ASME PCC-1-2000, Guidelines for Pressure Boundary Bolted Flange Joint Assembly
ASME Boiler and Pressure Vessel Code, Section I, Power Boilers
ASME Boiler and Pressure Vessel Code, Section III, Rules for Construction of Nuclear Power Plant Components, Division 1
ASME Boiler and Pressure Vessel Code, Section VIII, Pressure Vessels — Divisions 1 and 2
ASME Boiler and Pressure Vessel Code, Section IX, Welding and Brazing Qualifications

Publisher: The American Society of Mechanical Engineers (ASME), Three Park Avenue, New York, New York 10016-5990; Order Department: 22 Law Drive, Box 2300, Fairfield, NJ 07007-2300

ASTM A 105-01, Carbon Steel Forgings
ASTM A 106-99e1, Seamless Carbon Steel Pipe
ASTM A 182-01e1, Alloy Steel Forged or Rolled Parts
ASTM A 193-01b, Alloy Steel Bolting
ASTM A 194-01a, Carbon and Alloy Steel Nuts
ASTM A 203-97, Nickel Alloy Steel Plates
ASTM A 207-74a, Carbon-Moly Steel Plates — discontinued 1972
ASTM A 216-93 (1998), Carbon Steel Castings
ASTM A 217-02, Alloy Steel Castings
ASTM A 240-02, Stainless Steel Plate
ASTM A 275-98, Magnetic Particle Examination of Steel Forgings
ASTM A 302-97e1, Pressure Vessel Plates, Carbon Steel, Manganese-Molybdenum and Manganese-Molybdenum-Nickel
ASTM A 307-00, Carbon Steel Bolting
ASTM A 312-01a, Stainless Steel Pipe, Seamless or Welded
ASTM A 320-01, Low-Temperature Alloy Bolting
ASTM A 335-01, Seamless Ferritic Alloy Steel Pipe
ASTM A 350-00c, Low-Temperature Alloy Steel Forged or Rolled Parts
ASTM A 351-00, Stainless Steel Castings
ASTM A 352-93 (1998), Low-Temperature Carbon and Alloy Steel Castings
ASTM A 354-01, Q & T Alloy Bolting
ASTM A 358-01, Electric Fusion-Welded Stainless Steel Pipe
ASTM A 369-02, Ferritic Alloy Forged or Bored Pipe
ASTM A 387-99e1, Alloy Steel Plates
ASTM A 388-01, Ultrasonic Examination of Heavy Steel Forgings
ASTM A 430-91, Stainless Steel Forged or Bored Pipe — replaced by A312-2001a
ASTM A 453-00e1, Alloy Steel Bolting
ASTM A 479-02, Alloy Steel Bars and Shapes
ASTM A 488-01e1, Qualification of Procedures for Welding Castings
ASTM A 494-01ae1, Nickel and Nickel Alloy Castings
ASTM A 515-01, Carbon Steel Plates, High Temperature
ASTM A 516-01, Carbon Steel Plates, Low Temperature
ASTM A 537-95 (2000), Carbon-Manganese-Silicon Steel Plates
ASTM A 540-00, Alloy Steel Bolting, Special
ASTM A 609-91 (R2002) , Longitudinal-Beam Ultrasonic Inspection for Carbon and Low-Alloy Steel Castings
ASTM A 617-94, Electric-Fusion Welded Steel Pipe — replaced by A996-2001a

ASTM A 672-96, Electric-Fusion Welded Steel Pipe
ASTM A 675-90a (R2000), Carbon Steel Bars
ASTM A 691-98, Carbon & Alloy Steel Pipe — Electric-Fusion Welded
ASTM A 696-90a (R2000), Carbon Steel Bars
ASTM A 739-90a (R2000), Alloy Steel Bars
ASTM A 789-01a, Seamless and Welded Ferritic/Austenitic Stainless Steel Tubing for General Service
ASTM A 790-01, Seamless and Welded Ferritic/Austenitic Stainless Steel Pipe
ASTM B 407-01, Standard Specification for Nickel-Iron-Chromium Alloy Seamless Pipe and Tube
ASTM B 408-01, Standard Specification for Nickel-Iron-Chromium Alloy Rod and Bar
ASTM B 409-01, Standard Specification for Nickel-Iron-Chromium Alloy Plate, Sheet, and Strip
ASTM B 424-98a, Nickel-Iron-Chromium-Molybdenum-Copper Alloy Plate Sheet and Strip
ASTM B 425-99, Nickel-Iron-Chromium-Molybdenum-Copper Alloy Rod and Bar
ASTM B 434-00, Nickel-Molybdenum-Copper Iron Plate, Sheet and Strip
ASTM B 435-99a, Nickel-Chromium-Molybdenum-Iron Alloy Plate, Sheet and Strip
ASTM B 443-00e1, Nickel-Chromium-Molybdenum-Columbium Alloy Plate, Sheet and Strip
ASTM B 446-00e1, Nickel-Chromium-Molybdenum-Columbium Alloy Rod and Bar
ASTM B 462-00a, Chromium-Nickel-Iron-Molybdenum-Copper Columbium Forgings
ASTM B 463-99, Chromium-Nickel-Iron-Molybdenum-Copper Columbium Plate, Sheet and Strip
ASTM B 473-96, Chromium-Nickel-Iron-Molybdenum-Copper Columbium Bar
ASTM B 511-01, Nickel-Iron-Chromium-Silicon Alloy Bars and Shapes
ASTM B 536-95, Nickel-Iron-Chromium-Silicon Alloy Plate, Sheet and Strip
ASTM B 564-00a, Nickel Alloy Forgings
ASTM B 572-98a, Nickel-Chromium-Molybdenum-Iron Alloy Rod
ASTM B 573-00, Nickel-Molybdenum-Chromium-Iron Alloy Rod
ASTM B 574-99a, Low-Carbon Nickel-Molybdenum-Chromium Alloy Rod
ASTM B 575-99a, Low-Carbon Nickel-Molybdenum-Chromium Alloy Plate, Sheet and Strip
ASTM B 581-97, Nickel-Chromium-Iron-Molybdenum-Copper Alloy Rod
ASTM B 582-97, Nickel-Chromium-Iron-Molybdenum-Copper Alloy Plate, Sheet and Strip
ASTM B 599-92 (R1997), Nickel-Iron-Chromium-Molybdenum-Columbium Alloy Plate Sheet and Strip
ASTM B 620-98a, Nickel-Iron-Chromium-Molybdenum-Alloy Plate, Sheet and Strip
ASTM B 621-95a, Nickel-Iron-Chromium-Molybdenum-Alloy Rod
ASTM B 622-00, Seamless Nickel and Nickel-Cobalt Alloy Pipe and Tube
ASTM B 625-99, Nickel-Iron-Chromium-Molybdenum-Copper-Low-Carbon Alloy Plate, Sheet and Strip
ASTM B 649-95, Nickel-Iron-Chromium-Molybdenum-Copper Low-Carbon Alloy Bar and Wire
ASTM B 672-95, Nickel-Iron-Chromium-Molybdenum-Columbium Alloy Bar and WireASTM E 94-93, Radiographic Test

ASTM E 709-01, Standard Recommended Practice for Magnetic Particle Examination
ASTM E 142-92, Controlling Quality of Radiographic Testing — replaced by E94-2000
ASTM E 165-02, Liquid Penetrant Inspection Method
ASTM E 186 98, Reference Radiographs for Heavy-Walled (2 to 4½ in.) Steel Castings
ASTM E 280-98, Reference Radiographs for Heavy-Walled (4½ to 12 in.) Steel Castings
ASTM E 446-98, Standard Reference Radiographs for Steel Castings up to 2 in. in Thickness

Publisher: American Society for Testing and Materials (ASTM), 100 Barr Harbor Drive, West Conshohocken, PA 19428-2959

SP 9-2001, Spot-Facing for Bronze, Iron, and Steel Flanges
SP 25-1998, Standard Marking Systems for Valves, Fittings, Flanges, and Unions
SP 45-1998, Bypass and Drain Connection Standard
SP 61-1999, Hydrostatic Testing of Steel Valves
SP 55-2001, Quality Standard for Steel Castings

Publisher: Manufacturer's Standardization Society of the Valves and Fittings Industry (MSS), 127 Park Street NE, Vienna, VA 22180-4602

ISO 9000-2000, Quality Management Systems — Fundamentals and Vocabulary
ISO 9001-2000, Quality Management Systems — Requirements
ISO 9004-2000, Quality Management Systems — Guidelines for Performance Improvement

Publisher: International Organization for Standardization (ISO), rue de Varembé, Case Postale 56, CH - 1211, Genève 20, Switzerland/Suisse

ISO documents are also available from ANSI. Publications appearing below which have been approved as American National Standards may also be obtained from:

American National Standards Institute (ANSI), 25 West 43rd Street, New York, NY 10036

NONMANDATORY APPENDIX A
RELATIONSHIP BETWEEN NOMINAL PIPE SIZE AND INSIDE DIAMETER

The relationship between wall thickness and inside diameter shown in Table 3 is the basis for pressure rating of valves. By interpolation, a definitive design can be determined for any pressure-diameter-material combination.

Following the evolution of standard dimensions for flanges in a series of rating classes, corresponding standard relationships were established between nominal pipe sizes and the inside diameter of fittings matching the rating class of the flanges. These provided a useful design basis for the corresponding flanged end valves, subsequently extended in application to welding end valves, which in many cases are identical except for the pipe ends. Table A-1 is based on the dimensions given in B16.5 dimensional tables as "Inside Diameter of Fitting." The values for sizes greater than NPS 24 for the lower pressure classes and greater than NPS 12 for Class 2500 were obtained by linear extrapolation.

Table A-1 Inside Diameter, *d*

	Class 150		Class 300		Class 600		Class 900		Class 1500		Class 2500		
NPS	mm	*in.*	mm	*in.*	mm	*in.*	mm	*in.*	mm	*in.*	mm	*in.*	DN
1/2	12.7	*0.50*	12.7	*0.50*	12.7	*0.50*	12.7	*0.50*	12.7	*0.50*	11.2	*0.44*	15
3/4	19.1	*0.75*	19.1	*0.75*	19.1	*0.75*	17.5	*0.69*	17.5	*0.69*	14.2	*0.56*	20
1	25.4	*1.00*	25.4	*1.00*	25.4	*1.00*	22.1	*0.87*	22.1	*0.87*	19.1	*0.75*	25
1 1/4	31.8	*1.25*	31.8	*1.25*	31.8	*1.25*	28.4	*1.12*	28.4	*1.12*	25.4	*1.00*	32
1 1/2	38.1	*1.50*	38.1	*1.50*	38.1	*1.50*	34.8	*1.37*	34.8	*1.37*	28.4	*1.12*	40
2	50.8	*2.00*	50.8	*2.00*	50.8	*2.00*	47.5	*1.87*	47.5	*1.87*	38.1	*1.50*	50
2 1/2	63.5	*2.50*	63.5	*2.50*	63.5	*2.50*	57.2	*2.25*	57.2	*2.25*	47.5	*1.87*	65
3	76.2	*3.00*	76.2	*3.00*	76.2	*3.00*	72.9	*2.87*	69.9	*2.75*	57.2	*2.25*	80
4	101.6	*4.00*	101.6	*4.00*	101.6	*4.00*	98.3	*3.87*	91.9	*3.62*	72.9	*2.87*	100
5	127.0	*5.00*	127.0	*5.00*	127.0	*5.00*	120.7	*4.75*	111.0	*4.37*	91.9	*3.62*	125
6	152.4	*6.00*	152.4	*6.00*	152.4	*6.00*	146.1	*5.75*	136.4	*5.37*	111.0	*4.37*	150
8	203.2	*8.00*	203.2	*8.00*	199.9	*7.87*	190.5	*7.50*	177.8	*7.00*	146.1	*5.75*	200
10	254.0	*10.00*	254.0	*10.00*	247.7	*9.75*	238.0	*9.37*	222.3	*8.75*	184.2	*7.25*	250
12	304.8	*12.00*	304.8	*12.00*	298.5	*11.75*	282.4	*11.12*	263.4	*10.37*	218.9	*8.62*	300
14	336.6	*13.25*	336.6	*13.25*	326.9	*12.87*	311.2	*12.25*	288.8	*11.37*	241.3	*9.50*	350
16	387.4	*15.25*	387.4	*15.25*	374.7	*14.75*	355.6	*14.00*	330.2	*13.00*	276.1	*10.87*	400
18	438.2	*17.25*	431.8	*17.00*	419.1	*16.50*	400.1	*15.75*	371.3	*14.62*	311.2	*12.25*	450
20	489.0	*19.25*	482.6	*19.00*	463.6	*18.25*	444.5	*17.50*	415.8	*16.37*	342.9	*13.50*	500
22	539.8	*21.25*	533.4	*21.00*	511.0	*20.12*	489.0	*19.25*	457.2	*18.00*	377.7	*14.87*	550
24	590.6	*23.25*	584.2	*23.00*	558.8	*22.00*	533.4	*21.00*	498.3	*19.62*	412.8	*16.25*	600
26	641.4	*25.25*	635.0	*25.00*	603.3	*23.75*	577.9	*22.75*	539.8	*21.25*	447.5	*17.62*	650
28	692.2	*27.25*	685.8	*27.00*	647.7	*25.50*	622.3	*24.50*	584.2	*23.00*	482.6	*19.00*	700
30	743.0	*29.25*	736.6	*29.00*	695.2	*27.37*	666.8	*26.25*	625.3	*24.62*	517.4	*20.37*	750

NONMANDATORY APPENDIX B METHOD USED FOR ESTABLISHING PRESSURE-TEMPERATURE RATINGS

B-1 GENERAL CONSIDERATIONS

B-1.1 Introduction

Pressure-temperature ratings for this Standard have been determined by the procedures described in this Appendix. The method is general and considers dimensions of this and related standards.[1] Valve performance is related to stress and deformation. Valves require special consideration since they are mechanically operated devices that must be able to provide partial or complete restriction to fluid flow under a wide variety of conditions.

B-1.2 Materials

It is not required that identical materials be used for a valve body and bonnet or a valve body and cover. However, both shall be from materials listed in Table 1. The assigned pressure rating shall be based on the valve body. The bonnet or cover shall be designed and the material selected accordingly. Selection of material for and the design of stems, discs, and other parts, such as bonnet gaskets and bolting, subject to pressure loading, shall be consistent with the pressure-temperature rating.

B-1.3 Wall Thickness

Wall thickness requirements for valve bodies are specified in para. 6.1. The minimum wall thickness values, t_m, shown in Table 3 or calculated using the equation of Mandatory Appendix VI are all greater than those determined by the following equation.

$$t = 1.5\left[\frac{P_c d}{2S_F - 1.2P_c}\right] \tag{1}$$

where:

t = calculated thickness

P_c = pressure class designation number, e.g., for Class 150, $P_c = 150$; for Class 300, $P_c = 300$

d = inside diameter or port opening as defined in para. 6.1.2, (see Table 3 and Nonmandatory Appendix A)

S_F = stress based constant equal to 7,000

The equation does not apply for values of P_c greater than 4,500. The resultant units for t will be the same as those used to express d.

B-1.4 Additional Considerations

The equation in para. B-1.3 results in a wall thickness of 50% greater for Class 150 to 2500 and approximately 35% greater for Class 4500 than for a simple cylinder designed for a stress of 48.28 MPa (7000 psi) subjected to an internal pressure equal to the pressure rating class designation, P_c. The actual values in Table 3 are approximately 2.5 mm (0.1 in.) larger than those given by the equation. Additional metal thickness, particularly for ratings over Class 2500, needed for assembly stress, valve closing stresses, shapes other than circular, and stress concentrations must be determined by individual manufacturers, since these factors vary widely.

B-1.5 Material Properties

The pressure-temperature rating method uses allowable stresses, ultimate strengths, and yield strengths from referenced ASME Boiler and Pressure Vessel Code Sections. For materials listed herein that have ratings either at temperature values that are above those shown in a referenced Code section or that are not listed in any of the referenced Code sections, the allowable stress, ultimate strength, and yield strength data have been provided directly by the ASME Boiler and Pressure Vessel Subcommittee on Materials.

B-1.6 Material Groups

Materials are grouped in Table 1 based on identical or closely matched allowable stress and yield strength values. When these values are not identical for each material listed, the lowest value has been used.

B-2 STANDARD CLASS RATING METHOD

B-2.1 Method for Group 1 Materials

Pressure-temperature ratings for Standard Class valves, Class 300 and higher, of materials listed in Materials Group 1 of Table 1, were established by the equation

$$p_{st} = \frac{C_1 S_1}{8750} P_r \le p_{ca} \tag{2}$$

where

[1] This method is appropriate for materials listed in Table 1 of this Standard. It may not be appropriate for other materials.

p_{st} = Standard Class rated working pressure, bar, (psi) for the specified material at temperature T

p_{ca} = ceiling pressure, bar, (psi), at temperature T as specified in para. B-4 for Standard Class

P_r = pressure class rating index. For designations Class 300 and above, P_r is equal to the class designation number, e.g., for Class 300, P_r = 300. For Class 150 and for the interpolation method required for rating designations between Class 150 and 300, see para. B-2.3.

C_1 = 10 when S_1 is expressed in MPa units, the resultant p_{st} will be in bar units (C_1 = 1 when S_1 is expressed in psi units, the resultant p_{st} will be in psi units)

S_1 = selected stress, MPa (psi) for the specified material at temperature T. The value of S_1 shall be established as follows:

(a) At temperatures below the creep range, S_1 shall be equal to or less than 60% of the yield strength at temperature T, but shall not exceed:

(1) 60% of the specified minimum yield strength at 38°C (100°F)

(2) 1.25 times 25% of the ultimate tensile strength at temperature T

(b) At temperatures in the creep range, the value of S_1 shall be the allowable stress at temperature T, as listed in ASME Boiler and Pressure Vessel Code, Section II, Part D, for either Section I or Section VIII, Division 1; but not exceeding 60% of the listed yield strength at temperature.

(c) In no case shall the selected stress value increase with increasing temperature.

(d) The creep range is considered to be at temperatures in excess of 370°C (700°F) for Group 1 materials.

(e) When the allowable stresses listed for the referenced ASME Boiler and Pressure Vessel Code Section show a higher and lower value for allowable stress and the higher value is noted to the effect that these stress values exceed two-thirds of the yield strength at temperature, then the lower value shall be used. If lower allowable stress values do not appear and it is noted in the allowable stress table that the allowable stress values exceed two-thirds of the yield strength at temperature, then the allowable stress values to be used shall be determined as two-thirds of the tabulated yield strength at temperature.

(f) Ultimate tensile strength and yield strength values shall be as listed in ASME Boiler and Pressure Vessel Code, Section II, Part D.

(g) Allowable stress values listed in ASME Boiler and Pressure Vessel Code, Section II, Part D, for Section III, Class 2 or Class 3 values may only be used for a material not listed for either Section I or Section VIII, Division 1.

B-2.2 Method for Groups 2 and 3 Materials

Pressure-temperature ratings for Standard Class valves, Class 300 and higher, of materials corresponding to those in Materials Groups 2 and 3 of Table 1 are established by the method of para. B-2.1, except that in paras. B-2.1(a) and B-2.1(a)(1), 60% factor shall be changed to 70%, and, for Group 2 materials, the creep range is considered to be at temperatures in excess of 510°C (950°F) unless the material properties indicate lower temperatures should be used. For Group 3 materials, the creep temperature onset for B-2.1(d) shall be determined on an individual basis.

B-2.3 Method for Class 150 — All Materials

Pressure–temperature ratings for Standard Class valves, Class 150 rating designation, are established by the method given for the related materials in paras. B-2.1 and B-2.2, subject to the following exceptions:

(a) The value of P_r, the pressure class rating index in Eq. (2), for Class 150 shall be 115. For a rating designation between Class 150 and Class 300, an interpolation shall be made using P_r = 115 psi for Class 150

(b) The value for S_1, the selected stress MPa (psi), for the specific material at temperature T, shall be in accordance with the requirements stated in either para. B-2.1 or B-2.2

(c) The value of p_{st}, the rated working pressure, bar (psi), for Class 150, shall not exceed values at temperature, T, as given by Eq. (3)

$$p_{st} \le C_2 - C_3 T \tag{3}$$

where:

T = material temperature, °C (°F)

C_2 = 21.41 and C_3 = 0.03724 with T expressed in °C, the resultant p_{st} will be in bar units (C_2 = 320 and C_3 = 0.3 with T expressed in °F, the resultant p_{st} will be in psi units).

The value of T in Eq. (3) shall not exceed 540°C (1000°F). For values of T less than 38°C (100°F), use T equal to 38°C (100°F) in Eq. (3).

B-3 SPECIAL CLASS RATING METHOD

Pressure–temperature ratings for Special Class valves (see para. 2.1.2) are established for all materials of Table 1 by the equation

$$p_{sp} = \frac{C_2 S_2}{7000} P_r \le p_{cb} \tag{4}$$

where

p_{sp} = Special Class rated working pressure, bar (psi), for the specified material at temperature T

p_{cb} = ceiling pressure, bar (psi), at temperature T as specified in para. B-4 for Special Class

P_r = pressure class rating index. For all designations Class 300 and above, P_r is equal to the class designation number, e.g, for Class 300, $P_r = 300$. For Class 150, $P_r = 115$. For a pressure class designation between Class 150 and Class 300, the interpolation for the rated working pressures shall be made using $P_r = 115$ for Class 150.

C_2 = 10 when S_2 is expressed in MPa units, the resultant p_{sp} will be in bar units. ($C_2 = 1$ when S_2 is expressed in psi units, the resultant p_{sp} will be in psi units.)

S_2 = selected stress for the specified material at temperature T, MPa (psi). The value of S_2 shall be established as follows:

(a) At temperatures below the creep range, S_2 shall be equal to or less than 62.5% of the yield strength at temperature T, but shall not exceed:

(1) 62.5% of the specified minimum yield strength at 38°C (100°F)

(2) 25% of the ultimate tensile stress value at temperature T.

(b) At temperatures in the creep range, the value of S_2 shall be the allowable stress at temperature T, as listed in ASME Boiler and Pressure Vessel Code, Section II, Part D, for either Section I or Section VIII, Division 1; but not exceeding 62.5% of the yield strength at temperature T.

(c) In no case shall the selected stress value increase with increasing temperature.

(d) The creep range is to be considered that at temperatures in excess of 370°C (700°F) for Group 1 materials and 510°C (950°F) for Group 2 materials, unless material properties indicate lower temperatures to be used. For Group 3 materials, the creep range temperature limits shall be determined on an individual basis.

(e) When the allowable stresses listed for the referenced ASME Boiler and Pressure Vessel Code Section show a higher and a lower value for allowable stress and the higher value is noted to the effect that these stress values exceed two-thirds of the yield strength at temperature, then the lower value shall be used. If lower allowable stress values do not appear and it is noted in the ASME Boiler and Pressure Vessel Code, Section II, Part D allowable stress table that the allowable stress values exceed two-thirds of the yield strength at temperature, then the allowable stress values shall be determined as the lesser of two-thirds of the tabulated yield strength or the listed allowable stress at temperature.

(f) Ultimate tensile and yield strength values shall be as listed in ASME Boiler and Pressure Vessel Code, Section II, Part D.

(g) Allowable stress values listed in ASME Boiler and Pressure Vessel Code, Section II, Part D, for Section III, Class 2 or Class 3 values only, may be used for a material not listed for either Section I or Section VIII, Division 1.

B-4 MAXIMUM RATINGS

The rules for establishing Standard Class and Special Class pressure–temperature ratings include consideration of ceiling pressures, P_{ca} or P_{cb}, that effectively sets limits on the selected stress. The ceiling pressure–temperature values set an upper bound for high strength materials and are imposed to limit deflection. By definition, ceiling pressure values also apply to intermediate ratings (para. 2.1.5). Ceiling pressure values are listed in Table B-3. Except for Limited Class, ratings in excess of these are not permitted under this Standard.

B-5 INTERMEDIATE RATING CLASS METHOD

B-5.1 Conception

Welding end or threaded end valves may be designed for an *Intermediate Pressure Class* designation. In this case it is necessary to perform multiple linear interpolation using the data in Tables 2 and 3 in order to determine the intermediate pressure class designation, the intermediate pressure-temperature ratings, and the associated minimum wall thickness. Given at the start is the material identification, the intermediate working pressure, and its associated temperature.

B-5.2 Nomenclature

Definitions for paras. B-5.3 and B-5.4 are as follows:

d_I = a given inside diameter, reference para. 6.1.2

P_c = pressure class designation, reference B-1.3

P_{cI} = the calculated intermediate pressure class designation for p_I at T_I

P_r = pressure class rating index, reference para. B-2.1

P_{rI} = the calculated intermediate pressure class rating index for p_I at T_I

p_I = a given intermediate working pressure at T_I

T_I = a given temperature associated with p_I

t_I = the calculated required minimum wall thickness for P_{cI}

B-5-3 Interpolation for Intermediate Pressure Ratings

Given p_I at T_I and the valve material, refer to the applicable Table for the pressure-temperature rating tabulation. For the given T_I, locate T_a and T_b, the temperatures above and below T_I. For the given p_I, locate p_{aL}

Table B-1 Pressure-Temperature Matrix

T		P_{rL}	P_{rI}	P_{rH}	
T_a		p_{aL}	p_{aI}	p_{aH}	
T_I		p_{IL}	p_I	p_{IH}	
T_b		p_{bL}	p_{bI}	p_{bH}	

Table B-2 Class-Diameter Matrix

d		P_{cL}	P_{cI}	P_{cH}	
d_a		t_{aL}	—	t_{aH}	
d_I		t_{IL}	t_I	t_{IH}	
d_b		t_{bL}	—	t_{bH}	

and p_{aH} and also p_{bL} and p_{bH} the bounding pressures lower and higher than p_I. These are identified with pressure class rating indices P_{rL} and P_{rH}. These are shown schematically in Table B-1.

(a) Interpolate to find intermediate pressures, p_{IL} and p_{IH} at intermediate temperature, T_I.

$$p_{IL} = p_{aL} - (p_{aL} - p_{bL})\left(\frac{T_a - T_I}{T_a - T_b}\right) \tag{5}$$

$$p_{IH} = p_{aH} - (p_{aH} - p_{bH})\left(\frac{T_a - T_I}{T_a - T_b}\right) \tag{6}$$

(b) Interpolate to find the intermediate pressure class rating index, P_{rI}.

$$P_{rI} = P_{rL} + (P_{rH} - P_{rL})\left(\frac{p_I - p_{IL}}{p_{IH} - p_{IL}}\right) \tag{7}$$

(c) Interpolate to find the intermediate pressure class designation, P_{cI}.

$$P_{cI} = P_{cL} + (P_{rI} - P_{rL})\left(\frac{P_{cH} - P_{cL}}{P_{rH} - P_{rL}}\right) \tag{8}$$

Note that for $P_{cI} \geq 300$, $P_{cI} = P_{rI}$.

(d) Interpolate to find intermediate working pressures as temperature over the associated service temperature range applicable for P_{rI}. This interpolation is specifically required for the pressure rating at 38°C (100°F) that is needed for setting the hydrostatic test pressure and to meet the marking requirements and for setting the pressure associated with any maximum limiting temperature. For example, for $T = T_a$, the interpolated working pressure rating is

$$P_{aI} = P_{aL} + (P_{aH} - P_{aL})\left(\frac{P_{rI} - P_{rL}}{P_{rH} - P_{rL}}\right) \tag{9}$$

B-5.4 Wall Thickness for Intermediate Ratings

Given the valve inside diameter, d, (para. 6.1.2) and the calculated intermediate pressure class designation, P_{cI}, [para. B-5.3(c)] refer to Table 3 for the minimum wall thickness tabulation. For the given inside diameter, d_I, locate d_a and d_b, the diameters above and below d_I. For the given P_{cI}, locate P_{cL} and P_{cH}, the pressure class designation lower and higher than P_{cI}. The bounding minimum wall thickness is at the row-column intersection as shown schematically in Table B-2.

(a) Interpolate to find intermediate minimum wall thicknesses, t_{IL} and t_{IH}, at intermediate diameter, d_I.

$$t_{IL} = t_{aL} + (t_{bL} - t_{aL})\left(\frac{d_I - d_a}{d_b - d_a}\right) \tag{10}$$

$$t_{IH} = t_{aH} + (t_{bH} - t_{aH})\left(\frac{d_I - d_a}{d_b - d_a}\right) \tag{11}$$

(b) Interpolate to find the intermediate minimum wall thickness, (t_I).

$$t_I = t_{IL} + (t_{IH} - t_{IL})\left(\frac{P_{cI} - P_{cL}}{P_{cH} - P_{cL}}\right) \tag{12}$$

Table B-3 Pressure Rating Ceiling Values
A – Standard Class

Temperature, °C	Working Pressures by Class, bar						
	150	300	600	900	1500	2500	4500
−29 to 38	20.0	51.7	103.4	155.1	258.6	430.9	775.7
50	19.5	51.7	103.4	155.1	258.6	430.9	775.7
100	17.7	51.5	103.0	154.6	257.6	429.4	773.0
150	15.8	50.3	100.3	150.6	250.8	418.2	752.8
200	13.8	48.6	97.2	145.8	243.4	405.4	729.8
250	12.1	46.3	92.7	139.0	231.8	386.2	694.8
300	10.2	42.9	85.7	128.6	214.4	357.1	642.6
325	9.3	41.4	82.6	124.0	206.6	344.3	619.6
350	8.4	40.3	80.4	120.7	201.1	335.3	603.3
375	7.4	38.9	77.6	116.5	194.1	323.2	581.8
400	6.5	36.5	73.3	109.8	183.1	304.9	548.5
425	5.5	35.2	70.0	105.1	175.1	291.6	524.7
450	4.6	33.7	67.7	101.4	169.0	281.8	507.0
475	3.7	31.7	63.4	95.1	158.2	263.9	474.8
500	2.8	28.2	56.5	84.7	140.9	235.0	423.0
525	1.9	25.8	51.6	77.4	129.0	214.9	386.7
538	1.4	25.2	50.0	75.2	125.5	208.9	375.8
550	1.4	25.0	49.8	74.8	124.9	208.0	374.2
575	1.4	24.0	47.9	71.8	119.7	199.5	359.1
600	1.4	21.6	42.9	64.2	107.0	178.5	321.4
625	1.4	18.3	36.6	54.9	91.2	152.0	273.8
650	1.4	14.1	28.1	42.5	70.7	117.7	211.7
675	1.4	12.4	25.2	37.6	62.7	104.5	187.9
700	1.4	10.1	20.0	29.8	49.7	83.0	149.4
725	1.4	7.9	15.4	23.2	38.6	64.4	115.8
750	1.4	5.9	11.7	17.6	29.6	49.1	88.2
775	1.4	4.6	9.0	13.7	22.8	38.0	68.4
800	1.2	3.5	7.0	10.5	17.4	29.2	52.6
816	1.0	2.8	5.9	8.6	14.1	23.8	42.7

Table B-3 Pressure Rating Ceiling Values (Cont'd)
B – Special Class

Temperature, °C	Working Pressures by Class, bar						
	150	300	600	900	1500	2500	4500
−29 to 38	20.0	51.7	103.4	155.1	258.6	430.9	775.7
50	20.0	51.7	103.4	155.1	258.6	430.9	775.7
100	20.0	51.7	103.4	155.1	258.6	430.9	775.7
150	20.0	51.7	103.4	155.1	258.6	430.9	775.7
200	20.0	51.7	103.4	155.1	258.6	430.9	775.7
250	20.0	51.7	103.4	155.1	258.6	430.9	775.7
300	20.0	51.7	103.4	155.1	258.6	430.9	775.7
325	20.0	51.7	103.4	155.1	258.6	430.9	775.7
350	19.8	51.5	102.8	154.3	257.1	428.6	771.4
375	19.3	50.6	101.0	151.5	252.5	420.9	757.4
400	19.3	50.3	100.6	150.6	251.2	418.3	753.2
425	19.0	49.6	99.3	148.9	248.2	413.7	744.6
450	18.1	47.3	94.4	141.4	235.8	393.1	707.6
475	16.4	42.8	85.5	128.2	213.7	356.3	641.3
500	13.7	35.6	71.5	107.1	178.6	297.5	535.4
525	11.7	30.5	61.2	91.8	153.2	255.1	459.2
538	11.0	29.0	57.9	86.9	145.1	241.7	435.1
550	11.0	29.0	57.9	86.9	145.1	241.7	435.1
575	10.9	28.6	57.1	85.7	143.0	238.3	428.8
600	10.3	26.9	53.5	80.4	134.0	223.4	401.9
625	8.7	23.0	45.7	68.6	114.3	190.6	342.8
650	6.9	17.9	35.5	53.1	88.6	147.9	266.1
675	6.2	16.0	31.6	47.3	78.9	131.7	237.0
700	4.8	12.4	25.0	37.3	62.3	103.7	186.5
725	3.7	9.7	19.5	28.9	48.3	80.2	144.5
750	2.8	7.4	14.8	22.1	36.7	61.2	110.3
775	2.2	5.8	11.4	17.2	28.5	47.6	85.6
800	1.8	4.4	8.8	13.2	22.0	36.6	65.6
816	1.4	3.4	7.2	10.7	17.9	29.6	53.1

Table B-3 Pressure Rating Ceiling Values (Cont'd)
A – Standard Class

Temperature, °F	Working Pressures by Class, psig						
	150	300	600	900	1500	2500	4500
−20 to 100	290	750	1,500	2,250	3,750	6,250	11,250
200	260	750	1,500	2,250	3,750	6,250	11,250
300	230	730	1,455	2,185	3,640	6,070	10,925
400	200	705	1,410	2,115	3,530	5,880	10,585
500	170	665	1,330	1,995	3,325	5,540	9,965
600	140	605	1,210	1,815	3,025	5,040	9,070
650	125	590	1,175	1.765	2,940	4,905	8,825
700	110	570	1,135	1,705	2,840	4,730	8,515
750	95	530	1,065	1,595	2,660	4,430	7,970
800	80	510	1,015	1,525	2,540	4,230	7,610
850	65	485	975	1,460	2,435	4,060	7,305
900	50	450	900	1,350	2,245	3,745	6,740
950	35	385	775	1,160	1,930	3,220	5,795
1000	20	365	725	1,090	1,820	3,030	5,450
1050	20	360	720	1,080	1,800	3,000	5,400
1100	20	325	645	965	1,610	2,685	4,835
1150	20	275	550	825	1,370	2,285	4,115
1200	20	205	410	620	1,030	1,715	3,085
1250	20	180	365	545	910	1,515	2,725
1300	20	140	275	410	685	1,145	2,060
1350	20	105	205	310	515	860	1,545
1400	20	75	150	225	380	630	1,130
1450	20	60	115	175	290	485	875
1500	15	40	85	125	205	345	620

Table B-3 Pressure Rating Ceiling Values (Cont'd)
B – Special Class

Temperature, °F	Working Pressures by Class, psig						
	150	300	600	900	1500	2500	4500
−20 to 100	290	750	1,500	2,250	3,750	6,250	11,250
200	290	750	1,500	2,250	3,750	6,250	11,250
300	290	750	1,500	2,250	3,750	6,250	11,250
400	290	750	1,500	2,250	3,750	6,250	11,250
500	290	750	1,500	2,250	3,750	6,250	11,250
600	290	750	1,500	2,250	3,750	6,250	11,250
650	290	750	1,500	2,250	3,750	6,250	11,250
700	280	735	1,465	2,200	3,665	6,110	10,995
750	280	730	1,460	2,185	3,645	6,070	10,930
800	275	720	1,440	2,160	3,600	6,000	10,800
850	260	680	1,355	2,030	3,385	5,645	10,160
900	230	600	1,200	1,800	3,000	5,000	9,000
950	180	470	945	1,415	2,360	3,930	7,070
1,000	160	420	840	1,260	2,105	3,505	6,310
1,050	160	420	840	1,260	2,105	3,505	6,310
1,100	155	405	805	1,210	2,015	3,360	6,045
1,150	130	345	685	1,030	1,715	2,860	5,145
1,200	100	260	515	770	1,285	2,145	3,860
1,250	90	230	455	680	1,135	1,895	3,410
1,300	65	170	345	515	860	1,430	2,570
1,350	50	130	260	385	645	1,070	1,930
1,400	35	95	190	285	470	785	1,415
1,450	30	75	145	220	365	610	1,095
1,500	20	50	105	155	260	430	770

NONMANDATORY APPENDIX C
QUALITY SYSTEM PROGRAM

The products manufactured in accordance with this Standard shall be produced under quality system program following the principles of an appropriate standard from the ISO 9000 series.[1] A determination of the need for registration and/or certification of the products manufacturer's quality system program by an independent organization shall be the responsibility of the manufacturer. The detailed documentation demonstrating program compliance shall be available to the purchaser at the manufacturer's facility. A written summary description of the program utilized by the product manufacturer shall be available to the purchaser upon request. The product manufacturer is defined as the entity whose name or trademark appears on the product in accordance with the marking or identification requirements of this Standard.

[1] The series is also available from the American National Standards Institute (ANSI) and the American Society for Quality Control (ASQC) as American National Standards that are identified by a prefix "Q" replacing the prefix "ISO." Each standard of the series is listed in Mandatory Appendix VIII.

ASME B16.34 INTERPRETATIONS
Interpretation No. 4

Replies to Technical Inquiries
April 6, 1998 through February 13, 2003

FOREWORD

This publication includes all of the written replies issued between the indicated dates by the Secretary, speaking for the ASME B16 Committee, Standardization of Valves, Flanges, Fittings, Gaskets, and Valve Actuators, to inquiries concerning interpretations of technical aspects of B16.34, Valves — Flanged, Fitted and Welding End.

These replies are taken verbatim from the original letters except for a few typographical corrections and some minor editorial corrections made for the purpose of improved clarity. In some few instances, a review of the interpretation revealed a need for corrections of a technical nature; in these cases, a corrected interpretation follows immediately after the original reply.

These interpretations were prepared in accordance with the accreditied ASME procedures. ASME procedures provide for reconsideration of these interpretations when or if additioanl information is available which the inquirer believes might affect the interpretation. Further, persons aggrieved by this interpretation may appeal to the cognizant ASME Committee or Subcommittee. ASME does not "approve," "certify," "rate," or "endorse" any item, construction, proprietary device, or activity.

Interpretation: 4-1

Subject: B16.34-1996 and 1998, Flange Thickness Requirements

Date Issued: April 6, 1998

File: B16-98-006a

Question: Are flanged valves that conform to the flange thickness requirements for PN 10 steel valves within the Scope of ASME B16.34-1996 or 1998?

Reply: No.

Interpretation: 4-2

Subject: B16.34-1998, Use of Table 3 to Determine Minimum Wall Thickness

Date Issued: April 6, 1998

File: B16-98-006b

Question: Under the rules of B16.34-1998, is it permissible to use Table 3 to extrapolate minimum wall thickness for valves having pressure-temperature ratings less than Class 150?

Reply: No.

Interpretation: 4-3

Subject: B16.34-1996, para. 6.1.6

Date Issued: April 6, 1998

File: B16-98-006c

Question: Do the rules of para. 6.1.6 in B16.34-1996 apply to local areas having less than the required minimum wall thickness resulting from manufacturing operations, such as casting, forging, and machining, including grinding, milling, and drilling?

Reply: Yes.

Interpretation: 4-4

Subject: B16.34-1996, para. 5.2.2

Date Issued: May 2, 1998

File: B16-98-008

Question: Does ASME B16.34-1996, para. 5.2.2 place an obligation on a user to specify service conditions when those conditions are in a range that dictate the need for compliance with special requirements for material processing or testing, such as those cited in the example of that paragraph?

Reply: Yes.

Interpretation: 4-5

Subject: B16.34-1996, Designation of B16.34 Identification on a Valve and Valve Sizing

Date Issued: May 2, 1998

File: B16-98-009

Question (1): Under ASME B16.34-1996, is it permissible to apply a "B16.34" designation on the identification plate of a valve made of a material not listed in Table 1?

Reply (1): No.

Question (2): Under ASME B16.34-1996, is it permissible to designate a valve as being in compliance with B16.34 when the valve is made of material not listed in Table 1 and whose pressure-temperature rating was calculated by the method in Annex F?

Reply (2): No. The purpose of Annex F is to document the procedure used for calculating the pressure-temperature values for Table 2.

Question (3): Annex A of B16.34-1996 lists sizes to NPS 30 and pressure classes to Class 2500. Is there a listing or method to calculate values for larger sizes or higher pressure classes?

Reply (3): No. Annex A is an informative annex and as such is shown as one that is nonmandatory.

Interpretation: 4-6

Subject: B16.34-1996, para. 7.1

Date Issued: May 20, 1998

File: B16-98-010

Question: Under ASME Ba6.34-1996, does para. 7.1 include an allowance for bonnet joint gasket leakage just as it does for stem packing leakage?

Reply: No.

Interpretation: 4-7

Subject: B16.34-1996, para. 6.7

Date Issued: August 31, 1998

File: B16-98-012

Question: Are the requirements of para. 6.7 of ASME B16.34-1996 applicable to a flange design for the flanged body joint of a two-piece type ball valve body?

Reply: No. Paragraph 6.7 is specific to wafer or flangeless valves.

Interpretation: 4-8

Subject: B16.34-1996, para. 8.3.1.1

Date Issued: October 22, 1998

File: B16-98-019

Question: For Special Class valves to be in accordance with ASME B16.34-1996, may the requirements for casting radiography of ASME BPVC Section V be substituted for those of para. 8.3.1.1?

Reply: No.

Interpretation: 4-9

Subject: B16.34-1996, paras. 6.4.1(a) and 6.4.2(a)

Date Issued: October 22, 1998

File: B16-98-020

Question: In accordance with ASME B16.34-1996, are there conditions that permit the substitution of the bolting area requirements of 6.4.1(a) for those of 6.4.2(a)?

Reply: No.

Interpretation: 4-10

Subject: B16.34-1996, para. 8.3.1.1

Date Issued: October 22, 1998

File: B16-98-021

Question: When constructing Special Class valves that are of a configuration not specifically illustrated in Figs. 6 through 15 of ASME B16.34-1996, may a composite that combines elements of several of these figs. be used in order to meet the requirements of para. 8.3.1.1 for radiographic film coverage?

Reply: Yes.

Interpretation: 4-11

Subject: B16.34-1996, paras. 6.4.1(a) and 6.4.2(a)

Date Issued: November 17, 1998

File: B16-98-022a and B16-98-022b

Question: Do the bolting requirements of para. 6.4.1(a) or para. 6.4.2(a) of ASME B16.34-1996 apply for the flanges of a bolted split-body valve? A bolted split-body valve is defined here as having bolted flanged joints perpendicular to the pipeline in which it is installed, and said flanges are called upon to assume the same piping loads as the valve and flanges.

Reply: Paragraph 6.4.2(a) applies. Paragraph 6.4.1(a) applies only for valve bonnets or cover joints. Observe that these are minimum requirements, and according to para. 6.4.3, the valve manufacturer must determine if additional bolting is needed.

Interpretation: 4-12

Subject: B16.34-1996, In-Service Requirements for Valves

Date Issued: November 17, 1998

File: B16-98-023

Question: For a new valve, constructed in accordance with the requirements of ASME B16.34-1996, are there ASME B16.34 requirements for subsequent disassembly, cleaning, reassembly, and testing?

Reply: No.

Interpretation: 4-13

Subject: B16.34-1996, Requirements for Radiographic Examination of Flanged End Valves

Date Issued: November 17, 1998

File: B6-98-024

Question: Does ASME B16.34-1996 include requirements for radiographic examination of flanged end valves?

Reply: No. Paragraph 8.1 defines the applicability of examinations in Section 8 as being for Special Class Valves. Paragraph 2.1.2 limits Special Class construction to valves having threaded or welding ends.

Interpretation: 4-14

Subject: B16.34-1996, Annex F, Table F4-A

Date Issued: December 17, 1998

File: B16-98-025

Question: For ASME B16.34-1996, may the pressure rating ceiling values of Table F4 be interchanged with pressure-temperature rating values given in Table 2?

Reply: No. Table F4 is an informative table that is presented only to illustrate how it was used in conjunction with the rules of Annex F in the establishment of the specific rating requirements of Table 2.

Interpretation: 4-15

Subject: B16.34-1996, para. B1.11

Date Issued: December 17, 1998

File: B16-98-026

Question: In accordance with ASME B16.34-1996, is it permissible to substitute the radiographic sensitivity requirements of ASME BPVC Section V, Clause T-267 for the requirements of B16.34, para. B1.11?

Reply: No.

Interpretation: 4-16

Subject: B16.34-1996, Fig. 10

Date Issued: December 17, 1998

File: B16-98-027

Question: Figure 10 of ASME B16.34-1996 illustrates the radiographic film coverage for a plate-style flanged bonnet. When a bonnet is of a hemispherical style, does the film coverage, dimension A, apply to the intersection of the stem hole projection and the spherical dome?

Reply: The coverage applies to the bonnet flange intersection.

Interpretation: 4-17

Subject: B16.34-1996, para. 2.1.5(b), Valves Fabricated by Welding

Date Issued: February 17, 1999

File: B16-98-030

Question: For a weld-fabricated valve, constructed in accordance with the requirements of ASME B16.34-1996, do the requirements of para. 2.1.5(b) include impact testing for high-alloy steels to be in conformance with the ASME Boiler and Pressure Vessel Code, Section VIII, Division 1, Part UHA-51?

Reply: Yes. Note also the requirements of ASME B16.34, para. 1.2.2 for use of material at low-temperature, para. 2.1(g) for material considerations limiting pressure ratings, and para. 2.3.2 for low-temperature service.

Interpretation: 4-18

Subject: B16.34-1996, Date for Implementation of Requirements

Date Issued: January 13, 2000

File: B16-99-021

Question (1): Upon publication of a new edition of ASME B16.34, is there a mandatory date for its implementation?

Reply (1): No. Implementation may be required by reference, for example, in a Code, specification, sales contract, or public law.

Question (2): For valves in full conformance with ASME B16.34-1988, manufactured prior to January 31, 1997, the date of issuance of ASME B16.34-1996, is it required that prior to or upon installation after January 31, 1997, that such unused valves be certified by the manufacturer to ASME B16.34-1996?

Reply (2): No. Paragraph 1.2.3, ASME B16.34-1996 permits but does not require such updated certification.

Interpretation: 4-19

Subject: B16.34-1996, paras. 2.1.1(g), 2.2, F1.2, and 7.1

Date Issued: January 14, 2000

File: B16-99-020

Question (1): For ASME B16.34-1996, do paras. 2.1.1(g) and 2.2 imply that the pressure-temperature ratings apply only to the valve shell and not to the seating elements?

Reply (1): No.

Question (2): Does ASME B16.34-1996 permit valve pressure-temperature ratings to be limited by valve internals or seating or sealing materials?

Reply (2): Yes.

Question (3): In ASME B16.34-1996, para. F1.2, in the last sentence, do the words "other parts such as bonnet gaskets and bolting" include a valve actuator?

Reply (3): No. An actuator does not fit the "such as" restriction.

Question (4): In ASME B16.34-1996, para 7.1, last sentence, is there a conflict between "leakage through the stem packing shall not be cause for rejection" during the shell test that is at a pressure $1\frac{1}{2}$ times that of the cold working pressure and "however stem seals shall be capable of retaining pressure at least equal to the 100°F ratings without visible leakage" that corresponds to a pressure at least equal to the cold working pressure?

Reply (4): No.

Interpretation: 4-20

Subject: Paragraph 7.1, Shell Test

Date Issued: November 8, 2002

File: B16-02-005

Question: In accordance with ASME B16.34a-1998, if a valve shell test is performed at a temperature higher than 100°F and at a pressure lower than 1.5 times the 100°F valve pressure rating, does this meet the requirements of para. 7.1?

Reply: No.

Interpretation: 4-21

Subject: Paragraph 7.2, Valve Closure Test

Date Issued: February 13, 2003

File: B16-02-03971

Question: Does ASME B16.34 (1996 Edition, a-1998 Addenda) require valve closure tests in addition to what is specified by para. 7.2?

Reply: No.

Interpretation: 4-22

Subject: Manufacturer's Pressure-Temperature Rating

Date Issued: February 13, 2003

File: B16-02-03902

Question: In accordance with B16.34 (1996 Edition, 1998 Addenda), may a valve, of a specified pressure class, having a manufacturer's own pressure-temperature rating, one that exceeds the published ratings in ASME B16.34, be identified as being in compliance with ASME B16.34?

Reply: No.

B16 AMERICAN NATIONAL STANDARDS FOR PIPING, PIPE FLANGES, FITTINGS, AND VALVES

Scheme for the Identification of Piping Systems A13.1-1996 (R2002)
Pipe Threads, General Purpose (Inch) B1.20.1-1983 (R2001)
Dryseal Pipe Threads (Inch) B1.20.3-1976 (R2003)
Cast Iron Pipe Flanges and Flanged Fittings: Classes 25, 125, and 250 ..... B16.1-1998
Malleable Iron Threaded Fittings: Classes 150 and 300 ..... B16.3-1998
Gray Iron Threaded Fittings: Classes 125 and 250 ..... B16.4-1998
Pipe Flanges and Flanged Fittings NPS ½ Through NPS 24 Metric/Inch Standard B16.5-2003
Factory-Made Wrought Buttwelding Fittings B16.9-2003
Face-to-Face and End-to-End Dimensions of Valves B16.10-2000 (R2003)
Forged Fittings, Socket-Welding and Threaded B16.11-2001
Cast Iron Threaded Drainage Fittings B16.12-1998
Ferrous Pipe Plugs, Bushings, and Locknuts with Pipe Threads B16.14-1991
Cast Bronze Threaded Fittings: Classes 125 and 250 ..... B16.15-1985 (R2004)
Cast Copper Alloy Solder Joint Pressure Fittings B16.18-2001
Metallic Gaskets for Pipe Flanges: Ring-Joint, Spiral-Wound, and Jacketed B16.20-1998 (R2004)
Nonmetallic Flat Gaskets for Pipe Flanges B16.21-2005
Wrought Copper and Copper Alloy Solder Joint Pressure Fittings B16.22-2001
Cast Copper Alloy Solder Joint Drainage Fittings: DWV B16.23-2002
Cast Copper Alloy Pipe Flanges and Flanged Fittings: Class 150, 300, 400, 600, 900, 1500, and 2500 ..... B16.24-2001
Buttwelding Ends B16.25-2003
Cast Copper Alloy Fittings for Flared Copper Tubes B16.26-1988
Wrought Steel Buttwelding Short Radius Elbows and Returns B16.28-1994
Wrought Copper and Wrought Copper Alloy Solder Joint Drainage Fittings — DWV B16.29-2001
Manually Operated Metallic Gas Valves for Use in Gas Piping Systems up to 125 PSI (Sizes NPS ½ Through NPS 2) B16.33-2002
Valves — Flanged, Threaded, and Welding End B16.34-2004
Orifice Flanges B16.36-1996
Large Metallic Valves for Gas Distribution (Manually Operated, NPS 2½ to 12, 125 psig Maximum) B16.38-1985 (R2005)
Malleable Iron Threaded Pipe Unions: Classes 150, 250, and 300 ..... B16.39-1998
Manually Operated Thermoplastic Gas Shutoffs and Valves in Gas Distribution Systems B16.40-2002
Functional Qualification Requirements for Power Operated Active Valve Assemblies for Nuclear Power Plants B16.41-1983 (R1989)
Ductile Iron Pipe Flanges and Flanged Fittings: Classes 150 and 300 ..... B16.42-1998
Manually Operated Metallic Gas Valves for Use in Aboveground Piping Systems Up To 5 PSI B16.44-2002
Cast Iron Fittings for Sovent® Drainage Systems B16.45-1998
Large Diameter Steel Flanges (NPS 26 Through NPS 60) B16.47-1996
Steel Line Blanks B16.48-1997
Factory-Made Wrought Steel Buttwelding Induction Bends for Transportation and Distribution Systems B16.49-2000
Wrought Copper and Copper Alloy Braze-Joint Pressure Fittings B16.50-2001
Power Piping B31.1-2001
Fuel Gas Piping B31.2-1968
Process Piping B31.3-2002
Pipeline Transportation Systems for Liquid Hydrocarbons and Other Liquids B31.4-2002
Refrigeration Piping and Heat Transfer Components B31.5-2001
Gas Transmission and Distribution Piping Systems B31.8-1999
Building Services Piping B31.9-1996
Slurry Transportation Piping Systems B31.11-2002
Manual for Determining the Remaining Strength of Corroded Pipelines B31G-1991 (R2004)
Welded and Seamless Wrought Steel Pipe B36.10M-2000
Stainless Steel Pipe B36.19M-1985 (R2002)
Self-Operated and Power-Operated Safety-Related Valves Functional Specification Standard N278.1-1975 (R1992)

The ASME Publications Catalog shows a complete list of all the Standards published by the Society. For a complimentary catalog, or the latest information about our publications, call 1-800-THE-ASME (1-800-843-2763).

ASME Services

ASME is committed to developing and delivering technical information. At ASME's Information Central, we make every effort to answer your questions and expedite your orders. Our representatives are ready to assist you in the following areas:

ASME Press
Codes & Standards
Credit Card Orders
IMechE Publications
Meetings & Conferences
Member Dues Status
Member Services & Benefits
Other ASME Programs
Payment Inquiries
Professional Development
  Short Courses
Publications
Public Information
Self-Study Courses
Shipping Information
Subscriptions/Journals/Magazines
Symposia Volumes
Technical Papers

How can you reach us? It's easier than ever!

There are four options for making inquiries* or placing orders. Simply mail, phone, fax, or E-mail us and an Information Central representative will handle your request.

Mail
ASME
22 Law Drive, Box 2900
Fairfield, New Jersey
07007-2900

Call Toll Free
US & Canada: 800-THE-ASME
(800-843-2763)
Mexico: 95-800-THE-ASME
(95-800-843-2763)
Universal: 973-882-1167

Fax—24 hours
973-882-1717
973-882-5155

E-Mail—24 hours
Infocentral@asme.org

* Information Central staff are not permitted to answer inquiries about the technical content of this code or standard. Information as to whether or not technical inquiries are issued to this code or standard is shown on the copyright page. All technical inquiries must be submitted in writing to the staff secretary. Additional procedures for inquiries may be listed within.

ASME B16.34-2004

ISBN 0-7918-2860-3

J01804

Copyright ASME International
Provided by IHS under license with ASME
esale No reproduction or networking permitted without license from IHS